HUTH®

800-558-7808

www.huthbenders.com

The First and Still The Best

Pipe Benders •
Tooling •
Accessories •
Oil Filter Crushers •
Swagers/Expanders •

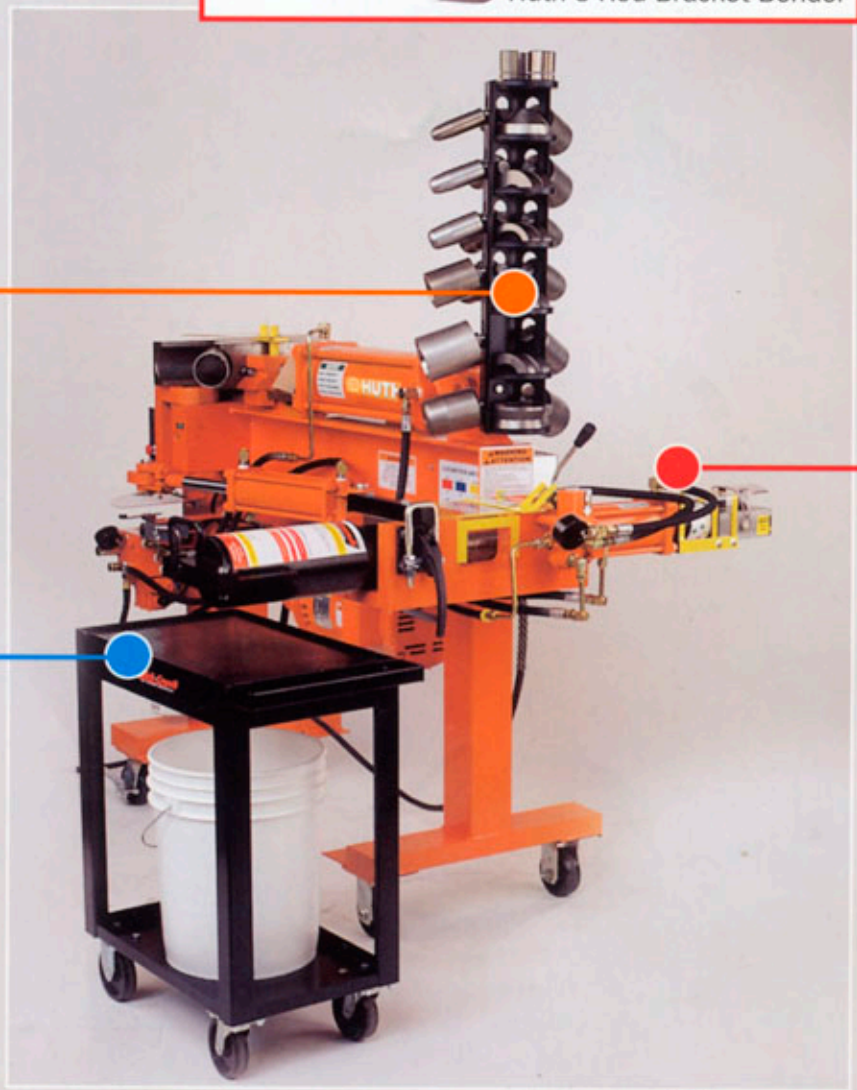

More Than a Bender

- Store Tooling
- Bend Brackets
- Crush Filters

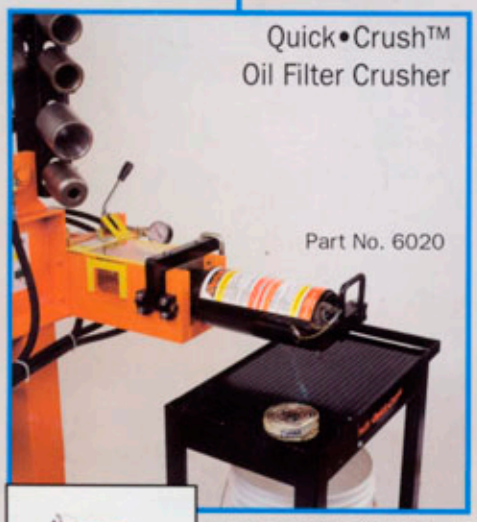

Huth's Quick•Crush™ Oil Filter Crusher turns the swager box on your Huth Bender into an oil filter crusher.

Crush oil filters to about 20% of their original size and squeeze out almost all of the waste oil.

Accessorize

Of course a Huth Bender still gives you complete pipe bending and end-finishing capabilities. But now you can do it all 25% faster with our new High Speed Option.

Add the Rod Bracket Bender and Quick•Crush Oil Filter Crusher and expand the capabilities of your Huth Bender even further.

The new Ready Rak II will keep all of your most often-used tooling within easy reach. It's ideal for 3" tooling.

HUTH®

Table Of Contents

Section 1 - Benders 2
- Bender Comparison Chart 2
- Anatomy of a Huth Bender 3
- Models 2008-2806 5
- HB-10 Complete Bender Package 6
- Model 1600 Huth's Basic Bender 8

Section II - Swagers/Expanders 9
- Model 1673 Portable Swager/Expander 9
- Model 1674 Portable Expander 10
- Models 1690 Bench-top and 1691 Portable Expanders 11
- Model 1680 Mitey Mate II™ Portable Expander 12
- Model 1685 Mitey Mate Jr.™ Portable Expander 12

Section III - Tools & Equipment 13
- Automotive and Light Truck Oil Filter Crusher 14
- Quick-Crush Oil Filter Crusher 14
- Exhaust Pipe Shapers 15
- Grommet Grabber 15
- Bender Training Video 15
- Rod Bracket Bender 15
- Material for Rod Bender 15
- Ready-Rak™ and Ready Rak II™ 16
- Exhaust Support Stand 17
- A-Train Tool and Die Holder 17
- Quick Trick™ 18
- Square Dies 18
- Quick Change Pin Kit 18
- Accu-Sizer 19
- Space Makers 19
- Program Cards 20

Section IV - Tooling 21
- Tooling Packages 21-23
- Bending Dies 24
- Shoes 25
- End-finishing Tools - Swager 26-27
- End-Finishing Tools - Expander 28-29
- Expanding Tool Chart 30
- Silhouette Chart - Segment Set Teeth 31-38

Section V - Parts & Accessories 39
- Bending Accessories 39-40
- Forming Accessories 41
- Maintenance Accessories 42
- Tooling Adapters 43
- Huth's End-Finishing Upgrade Kit 44

Section VI - Replacement Parts 45-73

Section VII - Index 74-78

Huth People 79-80

800-558-7808

(262)-673-9440

(262)-673-9443 (Fax)

www.huthbenders.com

Copyright 2004 by Huth Manufacturing

Huth Factory
P.O. 270467
260 Grant Street
Hartford, WI 53027

Corporate Headquarters
1300 Arlington Heights Road
Itasca, IL 60143

Section I

Huth Pipe Benders

Huth's History

Before Gerry Huth developed the first automotive pipe bender in the 1950s, fitting exhaust pipes was a difficult job that was beyond the means of many shops. Mechanics had to cut and weld pipe sections, making small bends manually. By 1958, Huth had developed the first prototype of the portable pipe bender. Soon, Huth was supplying benders to shops across the country. Huth Benders continue to lead the field more than 45 years later due to ongoing research and development, a strong commitment to quality and a responsiveness to the needs of a changing industry.

Pipe Bending

The value of portable, affordable pipe benders was quickly evident when Huth first introduced them. With the increased number and variety of cars on the road in the last 45 years, that need has increased. With a Huth bender, it's not necessary to keep a variety of pre-bent pipes in inventory. **With a few sizes of straight tubing on hand, you can quickly bend pipes for thousands of applications. You increase your profit margin and your customers don't have to wait for pre-bent pipes to be delivered.**

Huth Program Bending Cards contain more than 7,500 part numbers. Most of these can be bent in a few minutes. Add Huth's Rod Bracket Bender and bend your own brackets, too.

But today's Huth Benders are also used in many non-automotive applications. You will find our benders in a wide variety of manufacturing plants as well as welding and fabrication job shops. Huth products have been used in production and prototype roles for such products as sporting equipment, furniture, car ports, hand railings and many other applications that require pipe bending and end finishing.

Huth Benders

Although some fundamental, time-tested concepts were retained, ongoing research and development has allowed Huth Manufacturing to improve and refine their line of benders. Today Huth offers 4 automotive pipe benders with a variety of options, as well as numerous accessories, such as portable expanders, swager/expanders, oil filter crushers and a wide variety of tooling and tooling packages.

All Huth pipe benders share some important features: Rugged I-beam construction, 58,000 lbs. of bending power and a built-in swager/expander for complete end-finishing. There are some important differences between the benders, though. The chart below highlights some of these differences.

Huth Benders feature:

58,000 lbs. of Bending Power
A High Speed Option for 25% Faster Bending*
Built-In Swager/Expander for Complete End-Finishing
Rugged I-Beam Construction
Comprehensive Huth Bending Video Included
*** Except HB-10**

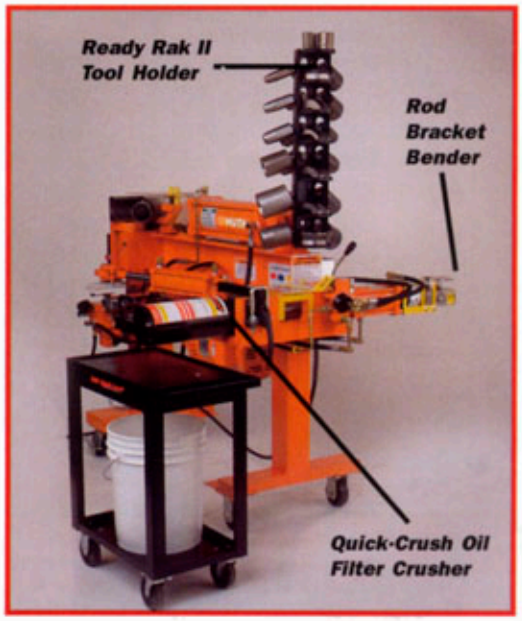

Versatile

Huth's 2008 Bender shown with Ready Rak II, Oil Filter Crusher and Rod Bracket Bender.

Huth Pipe Bender Comparison Chart

Bender	High Speed Option	Knee Control	Push Button	Optional Foot Pedal	Comes with Tooling	Swager/ Expander	Agricultural Cylinders	Industrial Cylinders	HB Cylinders	Optional 6" Cylinders	Swager Storage Tray	Deluxe Tool Tray	Flat Tool Tray
HB-10		X			X	X			X				X
1600	X	X		X		X			X	X			X
2008	X	X	X	X		X		X		X	X	X	
2806	X	X	X	X		X	X			X			X

Anatomy of a Huth Bender

Construction:
All Huth benders feature extra heavy-duty I-beam construction of structural quality steel, aircraft quality hydraulic hoses and UL® approved components.

Accessories:
Huth offers a variety of accessories to make your job easier. The Quick•Crush Oil Filter Crusher attaches in seconds to the swager end of a Huth bender, allowing you to crush oil filters to about 20% of their original size. The Rod Bracket Bender attaches to the expander end so you can custom-bend brackets, too.

Swager/Expander:
End-finishing is easy with the built-in heavy- duty swager/expander, standard on every Huth bender. Flares, ball joints, flanges and slip joints are easily created. Huth's Accu-Sizer™ automatic bull's-eye expanding system allows you to dial in precise expansions the first time and every

Tool Trays:
Depending on the bender, you receive either a flat tool tray, or, as shown here, a deluxe tool tray and swager storage tray to keep your tooling organized and within easy reach.

Tooling:
Huth tooling is gas-carburized, oil-quenched heat treated and precision machined from steel. Our tooling is case hardened to a minimum hardness of 58 Rockwell ("C" scale). All Huth tooling is manufactured in-house to ensure the

Speed:
A high speed pump/motor option is available on most Huth benders. Increase your bending speed by 25%.

Video:
Huth benders come with a comprehensive instructional video to help you get started quickly and easily.

Activation:
All current Huth Benders come equipped with a Forward/ Reverse Knee Pedal Control. The 2008, 2806 and 1600 can be configured with a Foot Pedal in addition to, or instead of, the Knee Pedal Control.
The 2008 and 2806 also have push button controls and Automatic Depth-of-Bend Selector.

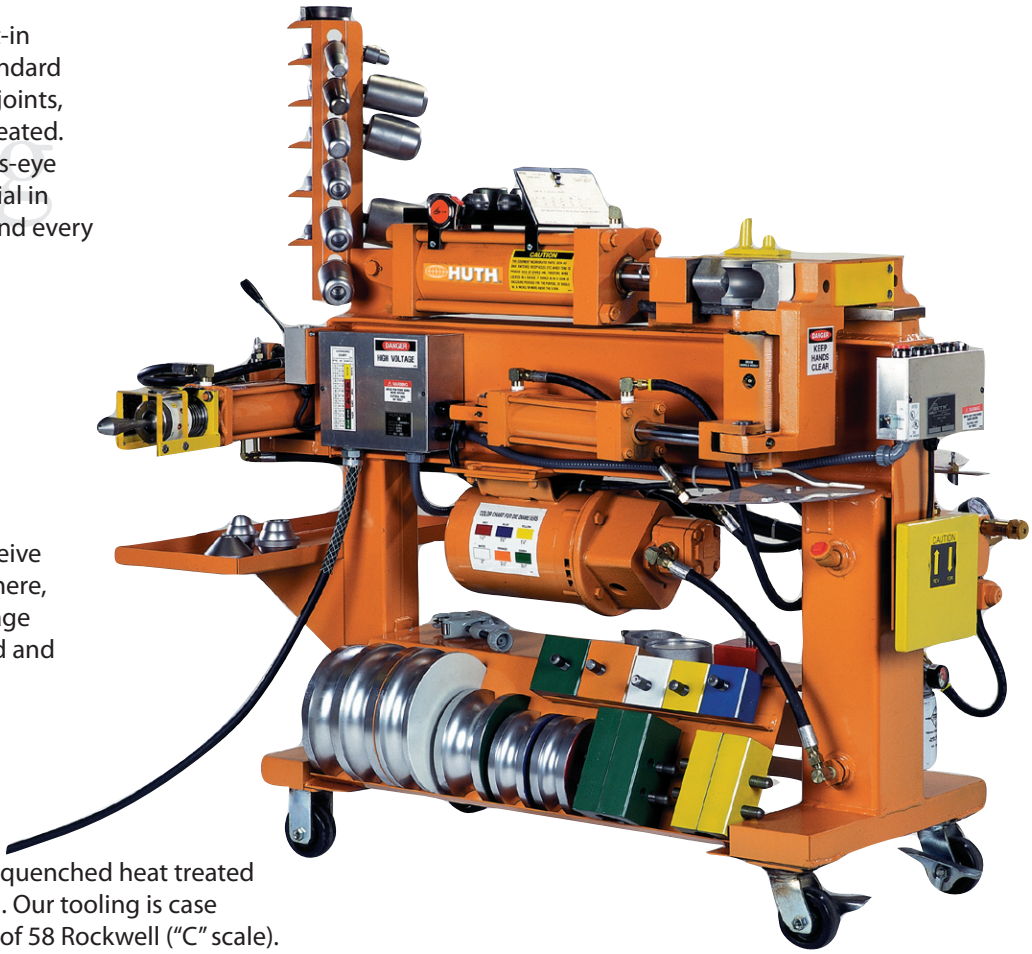

Power:
Huth benders feature powerful 5 H.P. motors with a 7½ H.P. option for high speed bending on all models except for the HB-10. You have 58,000 lbs. of bending force at

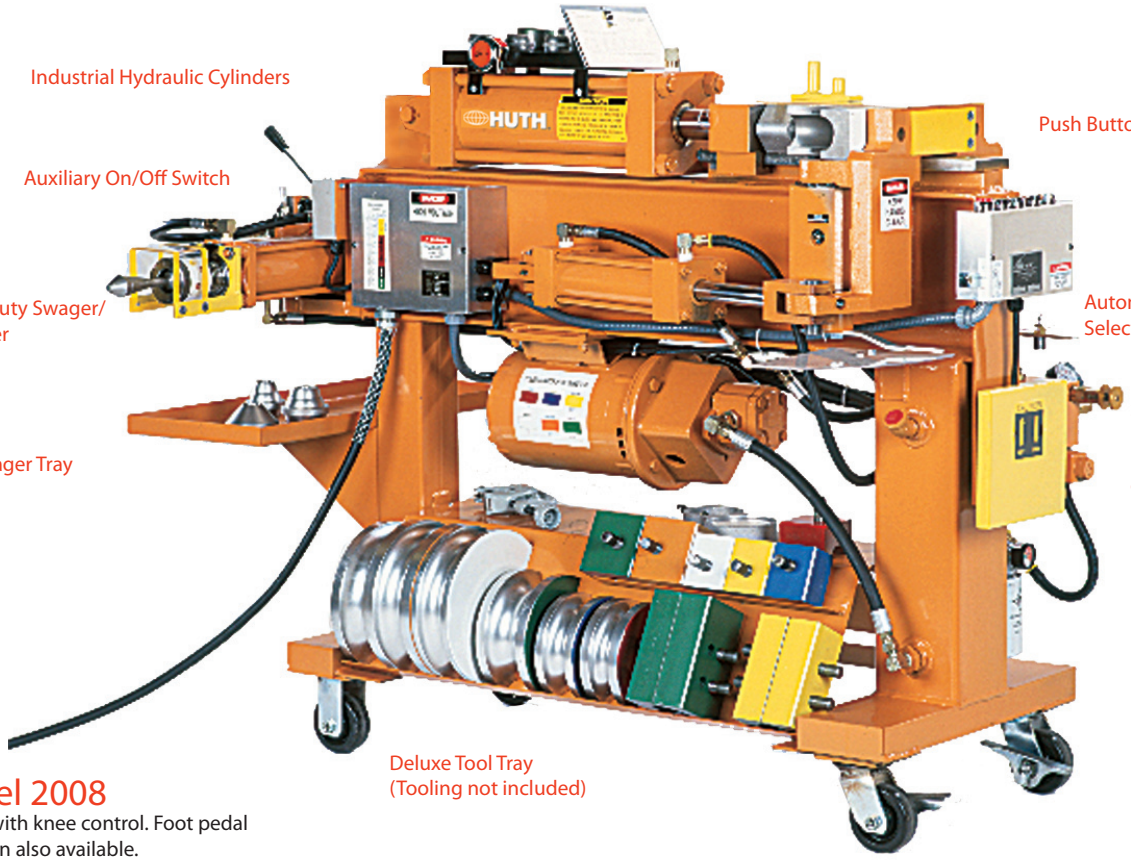

Model 2008

Shown with knee control. Foot pedal activation also available.
(Tooling not included)

Model 2806

Shown with knee control. Foot pedal activation also available.
(Tooling not included)

Models 2008-2806
Quick, Precise Bending

Huth Models 2008 and 2806 are designed for high volume shops that need quick, powerful, precise bending and end-finishing.

These models offer the convenience of knee pedal control and a reduced control panel size, allowing the operator to get closer to the work for more precision and less fatigue.

The Smart Automatic Mode features an adjustable return-to-home position control. This unique, timesaving feature increases efficiency by assuring fast and easy transitions between multiple bends.

Both models provide 58,000 lbs. of bending force with knee-pedal and push button activation. Foot pedal activation is also available.

Both models come with a 5 h.p. motor, but an optional 7½ h.p. motor is available for bending 25% faster.

In automatic mode, the automatic depth-of-bend selector ensures precise bending control through the use of an easy-to-read, easy-to-adjust dial.

The heavy duty swager/expander gives you complete end-finishing capabilities - 1" to 3" tubing on the swager end and 1" to 5½" tubing on the expander end. With Huth's Accu-Sizer™ automatic bull's-eye expanding system, you'll be able to dial in precise expansions every time.

Available with Foot Pedal Activation

Includes Huth Video

- **Easy-To-Use Knee Pad Control or Foot Pedal Control**
- **Push Button Control**
- **Automatic Depth-of-Bend Selector**
- **Complete Manual Control**
- **Auxiliary On/Off Switch (2008)**
- **High Speed Option available**
- **58,000 lbs Of Bending Power - More than enough for 3" tubing**
- **Industrial Hydraulic Cylinders (2008)**
- **Agricultural Hydraulic Cylinders (2806)**
- **Swager Tray (2008)**
- **Deluxe Tool Tray (2008)**
- **Flat Tool Tray (2806)**
- **Bending Die Retainers**
- **Heavy-Duty Swager/Expander**
- **Rugged I-Beam Construction**
- **Exclusive Safety-Guard Package**
- **Front Swivel Casters With Brakes**
- **220V, 60 Hz Operation. Single-Phase requires 30 amp service. 3-Phase requires 20 amp service. (Other voltages and 50 Hz available.)**

Huth People

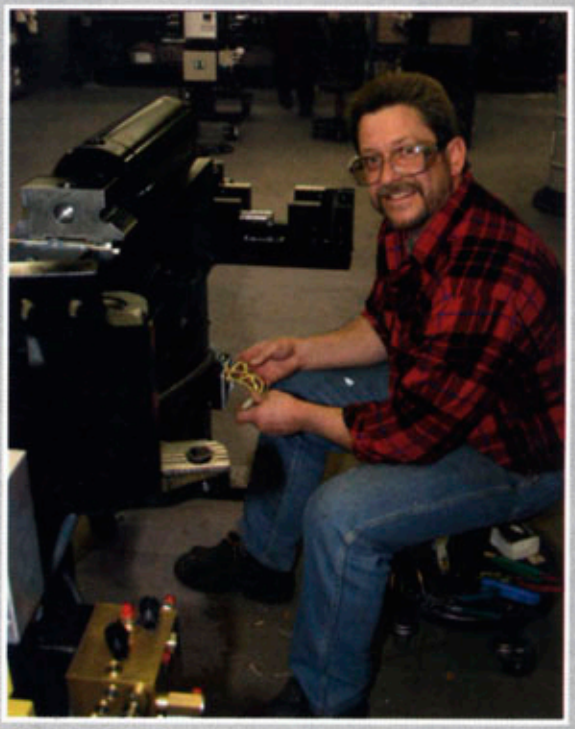

Joe Takacs wiring a Model 1600 Bender.

HB-10 Complete Bender Package

For one low price you get everything you need to bend up to 3" pipes, including tooling and instruction video.

Huth's HB-10 Complete Bender Package includes Huth's newest Manual Knee Control Bender and comprehensive tooling package - everything you need to create O.E.- fit and custom-bent pipes.

The HB-10 is Huth's entry level bender, designed to introduce you to Huth quality while showing you the incredible profit potential that awaits you.

The HB-10 features knee control activation, manual depth-of-bend control and 58,000 lbs. of bending power - more than enough for 3" tubing.

As with all Huth Benders, the HB-10 features a built-in swager/expander for complete end-finishing capability - 1" to 3" tubing on the swager end and 1" to 5½" tubing on the expander end.

Plus, you receive bending dies, end-finishing tooling and a Huth video - everything you need to start bending pipes for thousands of applications.

The HB-10 Bender package comes as shown. However, the HB-10 accepts all of Huth's standard tooling and accessories such as the Ready-Rak, Rod Bracket Bender and Oil Filter Crusher.

- Comes with comprehensive tooling package and instructional video
- Easy-To-Use Knee Pad Control
- Manual Depth-of-Bend Indicator
- Complete Manual Control
- 58,000 lbs of bending power - More than enough for 3" tubing
- HB Cylinders
- Flat Tool Tray
- Bending Die Retainer
- Heavy-Duty Swager/Expander
- Rugged I-Beam Construction
- Exclusive Safety-Guard Package
- Front Swivel Casters With Brakes
- 220V, 60 Hz Operation. Single-Phase requires 30 amp service. 3-Phase requires 20 amp service.

Complete Package

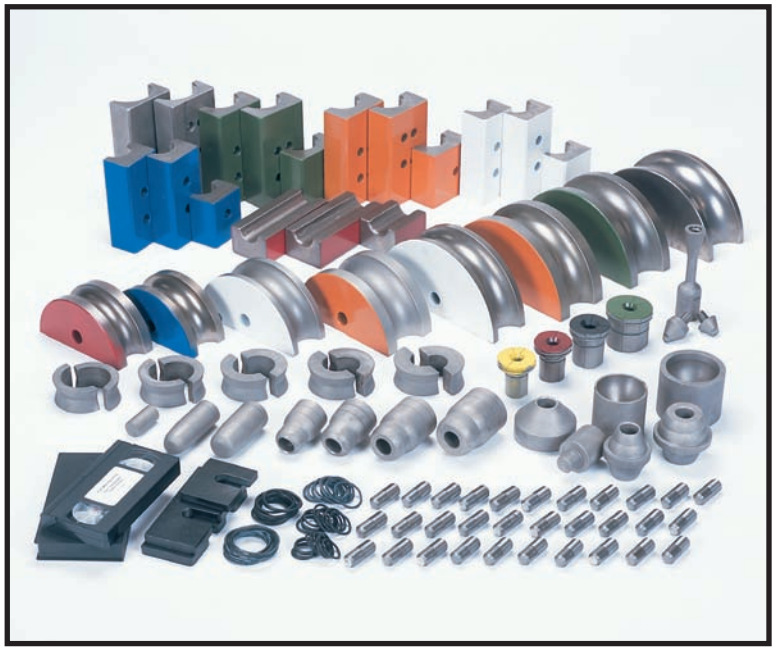

HB-10 Bending Package* Includes:

5530	5″ Radius Die 3″
5412	5″ Radius Die 2½″
5414	5″ Radius Die 2¼″
5200	5″ Radius Die 2″
4414	4″ Radius Die 2¼″
4200	4″ Radius Die 2″
3134	3″ Radius Die 1¾″
3112	3″ Radius Die 1½″
1350	Full Back Shoes 3″ (2)
4412	Full Back Shoes 2½″ (2)
4211	Full Back Shoes 2¼″ (2)
1200	Full Back Shoes 2″ (2)
1134	Full Back Shoes 1¾″ (2)
1112	Full Back Shoes 1½″ (2)
4410	Half Shoe 2½″
4416	Half Shoe 2¼″
1045	Half Shoe 2″
1040	Half Shoe 1¾″
1038	Half Shoe 1½″
1750	Collet 2½″
1725	Collet 2¼″
1720	Collet 2″
1734	Collet 1¾″
1712	Collet 1½″
853	Flare Tool
557	Domer Die 1¾″-2½″
558	Domer Die 2-5/8″-2¾″
555	Female Ball Die 1¾″-2″
556	Female Ball Die 2¼″-2½″
550	Male Ball Die 1¾″: Swage 2″
552	Male Ball Die 2″: Swage 2¼″
553	Male Ball Die 2¼″: Swage 2½″
554	Male Ball Die 2½″: Swage 2¾″
112	Swage Die 1½″
134	Swage Die 1¾″
508	Arbor
498	Arbor Tip
499	Arbor Tip
473	Segment 1-3/8″-1-3/4″
474	Segment 1-3/4″-2-1/8
475	Segment 2-1/8″ – 2-1/2″
476	Segment 2-1/2″-3″
97050	Die Spring
870	O-Ring Kit
815	Die Holder (853)
816	Die Holding Pin
855	Die Pins (Qty. 30)
1079	Full Shoe Spacers (2)
1080	Half Shoe Spacer
97302	Huth Instructional Video

*HB-10 package comes as listed only. Additional tooling available at extra charge.

End-Finishing

Built-In Swager/Expander

The built-in heavy duty swager/expander gives you complete end-finishing capabilities - 1″ to 3″ tubing on the swager end and 1″ to 5½″ tubing on the expander end.

With Huth's Accu-Sizer™ automatic bull's-eye expanding system, you'll be able to dial in precise expansions every time.

Knee Control

Slim Knee Control Activation allows you to get closer to your work for quick, precise bending.

An Easy-to-Read Bend Indicator shows how far into a bend you are.

Model 1600
Huth's Basic Bender

The Model 1600 Knee Control Bender is Huth's entry level bender. The rugged, versatile 1600 is the same bender as in the HB-10 package. But it comes without the tooling, making it ideal for those who want to put together their own tooling packages or who already have tooling but want to replace or add a bender.

The 1600 delivers 58,000 lbs. of bending power - more than enough for 3" tubing. Bending is activated by a slim-design knee control pedal, allowing the operator to get close to the work for more precision. A foot pedal can be substituted for the knee pedal, if desired, at no charge. For a nominal charge, Huth will install a foot pedal and a knee pedal.

A manual depth-of-bend indicator clearly shows the operator how far into a bend he is at all times.

The 1600 comes with a powerful 5 h.p. motor. An optional 7½ HP motor is available for high speed bending - 25% faster.

As with all Huth Benders, the 1600 features a built-in swager/expander for complete end-finishing - 1" to 3" tubing on the swager end and 1" to 5½" tubing on the expander end. Ball joints, flanges, flares and slip joints are easily created. Huth's Accu-Sizer™ automatic bull's-eye expanding systems lets you dial in precise expansions every time.

The 1600 accepts all of Huth's standard tooling and accessories such as the Ready-Rak, Rod Bracket Bender and Oil Filter Crusher.

Built-In Swager/Expander

The built-in heavy duty swager/expander gives you complete end-finishing capabilities - 1" to 3" tubing on the swager end and 1" to 5½" tubing on the expander end.

With Huth's Accu-Sizer™ automatic bull's-eye expanding system, you'll be able to dial in precise expansions every time.

NEW!

- Easy-To-Use Knee Pad Control
- Manual Depth-of-Bend Indicator
- Includes Huth Instructional Video
- Available with Foot Pedal Activation
- Complete Manual Control
- Built-in swager/expander for complete end-finishing
- 58,000 lbs of bending power - More than enough for 3" tubing
- HB Cylinders
- Flat Tool Tray
- Bending Die Retainer
- Heavy-Duty Swager/Expander
- Rugged I-Beam Construction
- Exclusive Safety-Guard Package
- Front Swivel Casters with Brakes
- 220V, 60 Hz Operation. Single-Phase requires 30 amp service. 3-Phase requires 20 amp service.

Includes Huth Video

Available with Foot Pedal Activation

Model 1673
Portable Swager/Expander

The 1673 Portable Swager/Expand

Swage or Expand Tubing Anywhere

Mounted on its own easy wheeling cart, Huth's Model 1673 portable expander equips you to form standard slip joints, flares and flat flares, ball joints, deep swage expands, and reductions.

The large tray allows you to keep your tooling within easy reach and additional tool storage is available by attaching the 91166 or 91176 Ready Rak (purchased separately, page 16). Just wheel the 1673 to the job and watch it pay for itself.

Features:

- A powerful 5 HP motor, single-phase (30 amp), or 3-phase (20 amp)
- Runs on 220 volt, 60 Hz supply. 50 Hz and other voltages available
- The 3½" cylinder produces 25,000 lbs. of expanding power
- Expanding capacity from 1" to 5½"
- Features Huth's Accu-Sizer™ automatic, preset expanding system for quick, precise expanding each and every time
- Adjustable Collar for expanding 1" to 3½"
- Collet Holder for 1" to 2½" O.D. tubing
- Swaging capacity from 1" to 3"
- "See-through" safety guards for increased protection during all operations
- Front swivel caster w/brake
- 15' power cord with male and female receptacles
- Includes 41047 Accu - Sizer adjustable collar and 891 collet holder

Model 1674 Portable Expander

Expand Tubing Anywhere

Mounted on its own easy wheeling cart, Huth's Model 1674 portable expander equips you to use all existing Huth expanding tooling. Now with the powerful 5" cylinder you can expand tubing from 3" up to, and larger than 6" diameter, 3" deep. The large tray allows you to keep your tooling within easy reach. Just wheel the 1674 to where the work is.

The 1674 Portable Swager/Expand-

er

Features:

- A powerful 5 HP motor, single-phase (30 amp), or 3-phase (20 amp)
- Runs on 220 volt, 60 Hz supply. 50 Hz and other voltages available
- The 3½" cylinder produces 25,000 lbs. of expanding power and the 5" cylinder produces 49,000 lbs. of expanding power
- Expanding capacity from 1" to 6" and greater
- Features Huth's Accu-Sizer™ automatic, preset expanding system for quick, precise expanding each and every time
- Front swivel caster w/brake
- 15' power cord with male and female receptacles
- Includes 41047 Accu - Sizer adjustable collar for the 3-1/2" cylinder, and the 527 adjustable collar with the 528 collar extension for the 5" cylinder

Models 1690 Bench-top and 1691 Portable Expanders

Perfect for auto stores, warehouses, small shops and industrial settings.

Model 1690 Bench-top Expander

The 1690's compact design allows it to fit on your bench-top while the foot pedal gives you hands-free operation. Quickly and easily size muffler end tubes and pipes. The 1690 comes with the tooling shown above for expanding capacity from 1½" to 3½". Additional tooling gives you expanding capacity from 1" to 5½".

Model 1691 Portable Expander

Just wheel the 1691 to the job and put Huth's expanding power to work. Quickly and easily size muffler end tubes and pipes anywhere in your shop. The 1691 comes with the tooling shown above for expanding capacity from 1½" to 3½". Additional tooling gives you expanding capacity from 1" to 5½".

1690 Bench-top and 1691 Portable Expander Features:

- Hands-free operation with Foot Pedal Activation
- Allows you to create custom brackets with Huth's Rod Bracket Bender (optional).
- Standard Expanding Capacity from 1½" to 3½"
- Expanding Capacity from 1" to 5½" with additional tooling
- Powerful 2 HP motor available in 110V, 30 Amp or 220V, 20 Amp. Motor runs on both 50Hz and 60Hz.
- 25,000 lbs of expanding power
- Features Huth's Accu-Sizer™ automatic, preset expanding system for quick, precise expanding each and every time.
- Built-in tool tray for easy access to tooling
- "See-through" safety guards for increased protection during all operations
- Compact 12"x 20"x 24" design (1690)
- Compact 24"x 23"x 39" design (1691)
- Rugged cart for maximum portability (1691)
- Power cord (15' - 1691, 10' - 1690) with male and female receptacles
- Includes: 508 Arbor, 498 Small Arbor Tip, 499 Large Arbor Tip, 473 Segment Set, 474 Segment Set, 475 Segment Set, 476 Segment Set, 477 Segment Set

Portable Expanders: Unmatched Sizing Accuracy, Under the Car or on the Bench

Model 1680 Mitey Mate II™ Portable Expander

Model 1680 Mitey Mate II™

110 Volt Electric

Model 1680

Right-on sizing for flaring*, ball joints**, and slip connections, under the car or on the bench! Huth's Mitey Mate II Portable Expander and Accu-Sizer™ System (Model 1680) is the go-anywhere tool.

The 1680's bulls-eye adjustments allow you to zero-in on the right expansion the first time. Plus, the 1680's segment sets fit the arbor like a glove to give you the expected expansion time after time.
(See End-Finishing Tooling, page 28-29 and Expanding Tool Chart, page 30.)

Set to operate at 3200 psi, The Mitey Mate II requires a 110 Volt (15 Amp) power supply. No compressor is needed. It comes with tooling to expand 1½" to 2½" I.D. mufflers and pipes (3" and 3½" capability with additional tooling) and has up to 17,000 pounds of expanding force available.

The expander features a pistol grip that weighs only 7 pounds. The electric motor sits on large casters, so it's ideal for work under the car.

*Requires use of No. 440 Flaring Segment Tool.
**Requires use of Ball Joint Segment Tools.

Model 1685 Mitey Mate Jr.™ Portable Expander

Runs on shop air

Model 1685

Model 1685 Mitey Mate Jr.™

Huth redefines expanding portability and convenience with this down-sized, air-powered offspring of its popular Mitey Mate II™ expanding unit. Ideal for making flares*, ball joints†, and slip connections under the vehicle or on the bench, Mitey Mate Jr. is not a lesser expander: It delivers both the power and the accuracy you demand.

Set to operate at 3200 psi (shop air pressure between 80 and 120 psi maximum**) this pint-sized powerhouse puts 17,000 pounds of expanding force in your hands. Mitey Mate Jr. also comes with tooling to expand 1½" to 2½" I.D. mufflers and pipes (3" and 3½" capability with additional tooling).

It also comes with Huth's unique Accu-Sizer™ System for right-on expansions, job after job.

The expander itself, with its high-impact pistol grip, removable arbor tips and simple-to-set bulls-eye sizing adjustments, weighs only 7 pounds. All three pieces together weigh only 34 pounds.

The handy storage unit, which holds the expander, the three segment sets and one of the two detachable arbor tips, is 9" high by 10½" square. The power pedal is only 8" high, 10" long and 5" wide, and fits under the storage unit.

*Requires use of No. 440 flaring segment.
**Air regulator included in package.
†Requires use of ball joint segment tools.

·Oil Filter Crushers
·Tooling Organizers
·Labor-Saving Accessories

Tooling Storage

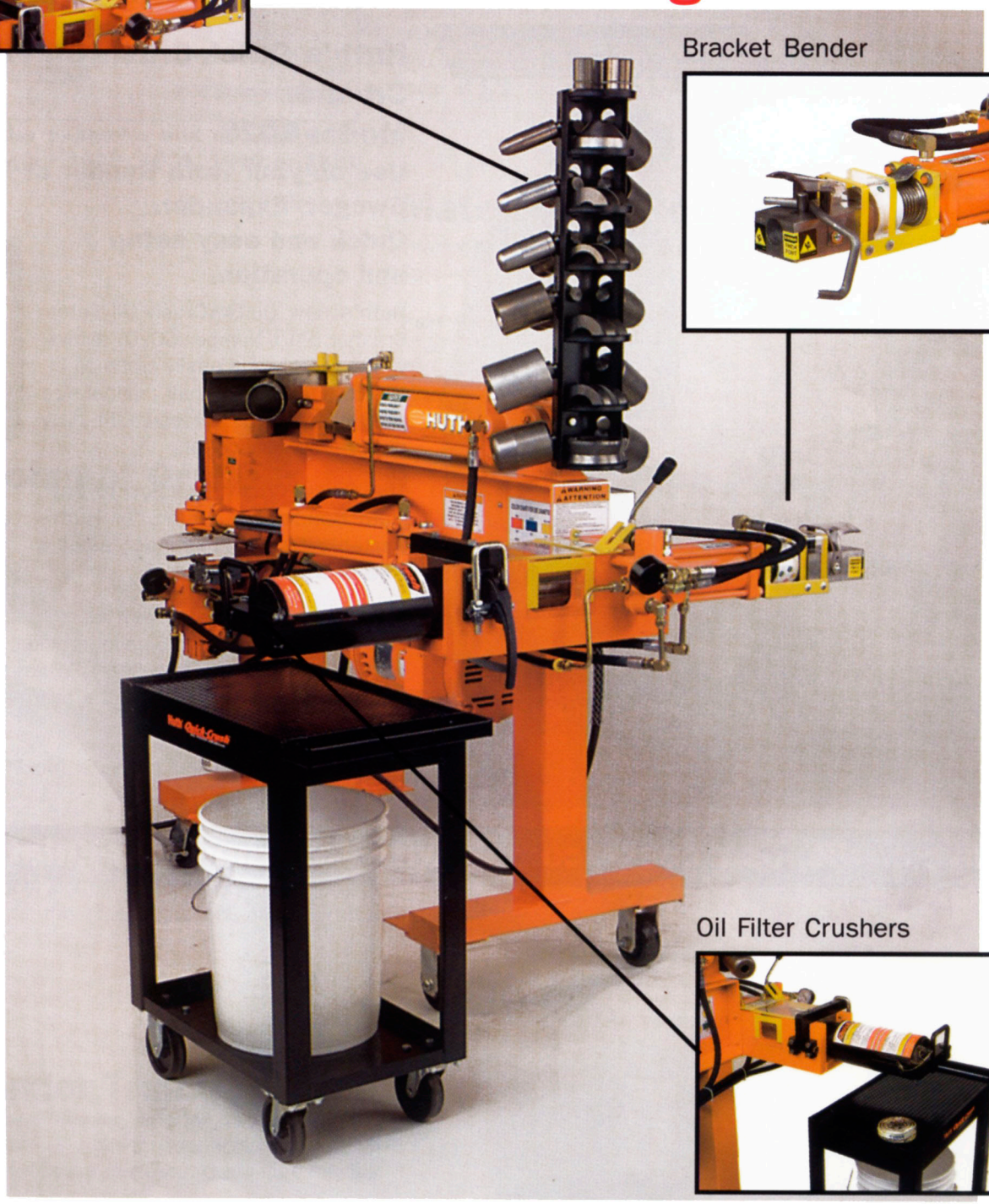

Bracket Bender

Oil Filter Crushers

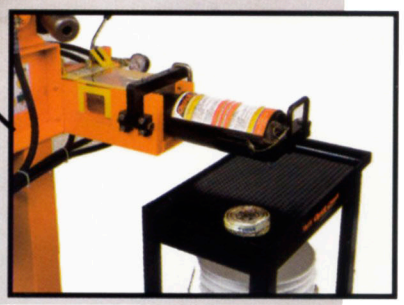

Oil Filter Crushers

Huth's Quick•Crush™ turns your Huth Bender into an Oil Filter Crusher.

Huth's Quick-Crush Oil Filter Crusher Model 6020

Use on your Huth Bender or Portable Swager/Expander.
Quick and easy setup and operation.

Huth's new Quick•Crush Oil Filter Crusher (Part Number 6020) allows you to quickly and easily crush oil filters to a fraction of their original size while allowing you to reclaim the dirty oil for proper disposal.

The Quick•Crush attaches to any Huth Bender swager box or Huth Portable Swager/Expander using 890 or 891 collet holders.

The Quick Crush comes with its own cart that directs the reclaimed oil into your 5-gallon bucket. The cart doubles as a storage rack for the filters. When the Quick Crush is not attached to your bender, the cart makes a handy storage tray.

Requires part number 818 Quick Trick™ holder. (See page 18.)

Save on disposal costs; comply with government regulations

Automotive and Light Truck Oil Filter Crusher

Model 6007

6007 Features:

- Easy Operation
- Operates on compressed air (80 -150 psi)
- Crushes automotive filters to 20% of their original size
- Safe - Unique interlock safety system
- Fast - Complete cycle time: 9 seconds
- All metal construction for durability
- Huth Quality

Model 6010
Optional Floor Stand

Model 6007
Oil Filter Crusher

(Floor stand not included.)

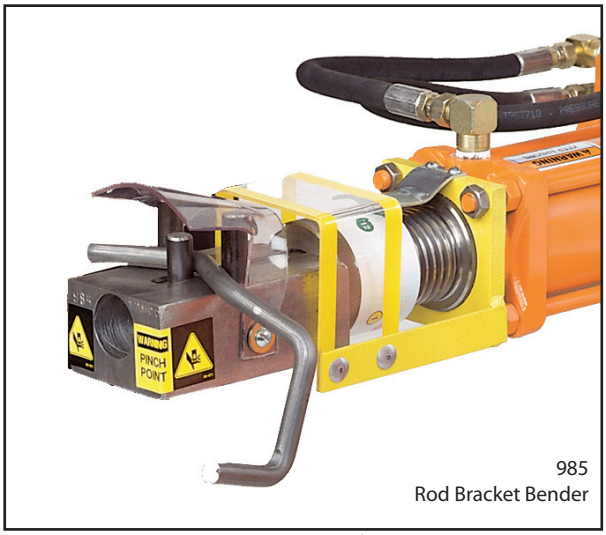

985
Rod Bracket Bender

Attaches to the expander end of your Huth Bender, or to your 1673, 1674, 1690 or 1691 expanders.

Save Money!
Bend your own Brackets.
985 - Rod Bracket Bender

If you own a Huth Bender, you already know the profits you can make by bending your own exhaust pipes. But you probably still order prebent pipes for those systems that need brackets.
Don't.
Stop throwing away your profit margin and bend the brackets yourself. It's easy with the Rod Bracket Bender.
Install it on the expander of your Huth Bender and watch it pay for itself.
You can quickly produce muffler hanger brackets from material as large as 1/2" dia. round or 1/4" x 1" flat. Order Part Number 985.

Material for Rod Bender

The following lengths of rod material can be ordered directly from your exhaust distributor:

Part No.	Diameter	Length
F2372	7/16" Round	14" (20 pcs.)
F2373	1/2" Round	14" (20 pcs.)
F2374	1-1/4" x 1/8" Flat	14" (20 pcs.)

987 - Grommet Grabber

987 Grommet Grabber

The Grommet Grabber is designed to remove hanger brackets from their rubber mounting grommets with a squeeze of the handles. To get this time-saving tool, order Part Number 987.

Exhaust Pipe Shapers

The Exhaust Pipe Shaper is designed to repair dented and damaged pipe ends or muffler inlets and outlets.
The Shaper is machined, welded and heat treated for durability.
For use on exhaust pipe up to 3" dia. order part number 984.
For 2" to 5" dia. pipe order part number 982.

982 Exhaust Pipe Shaper (left)
984 Exhaust Pipe Shaper (right)

Huth Bender Training Video

Designed to reduce training time for new technicians, this 42-minute bender training video includes clear visual instruction to reduce mistakes. Order Part Number 97302.

97302
Huth Training Video

Get Organized and Save Time with Huth's Ready-Rak™ and New Ready Rak II™

Keep your end-finishing tools within easy reach.

With Huth's Ready Rak (part no. 91166) and new Ready Rak II (part no. 91176) you can keep all your most-used end-finishing tools within easy reach of your swager/expander. The Ready Rak is 20-1/8" x 4-3/8" with six 4-3/4" deep trays, making it useful for most standard tooling packages.

But if you have a larger variety of tooling, or use 3" tooling, you'll want the new Ready Rak II. The Ready Rak II is 25-1/4" x 5" and has 5 more slots than the Ready Rak. Its seven large trays are 5" deep for easier access, especially with 3" tooling.

Ready Rak™

Part No. 91166
Great for standard tooling packages
20-1/8" x 4-3/8"
12 Slots
6 Trays (4-3/4" Deep)

Ready Rak II™

Part No. 91176
Holds 40% more tooling than the Ready Rak
Ideal for 3" tooling
25-1/4" x 5"
17 Slots
7 Trays (5" Deep)

The A-Train Tool and Die Holder

6006 A-Train

Designed to keep tools at eye level for easy access, the A-Train has 8 large shelves (4 on each side) and can hold everything from radius dies to ball joint tools.

The A-Train (Part Number 6006) is 52" high, 38" long and 36" wide at the base.

Made from heavy-duty angle iron, the A-Train also has industrial strength casters, two of which swivel and have brakes. Order part number 6006.

Exhaust Support Stand

986 Exhaust Support Stand

Designed to safely support exhaust components during installation, the Exhaust Support Stand measures 47" and extends to 79". The unit has an oversized support tray and rotates 360°. The spring loaded, quick-release extension mechanism is also self-locking. Order Part Number 986.
(70 lb. Maximum Capacity)

Huth People

Jerry Geldnich assembling hydraulics on a Huth Model 1600 bender.

Mark Jeffords with the welded heavy-duty I-beam frame for a Huth bender.

Changing End-Finishing Tools is Fast and Simple With Quick Trick™ By Huth

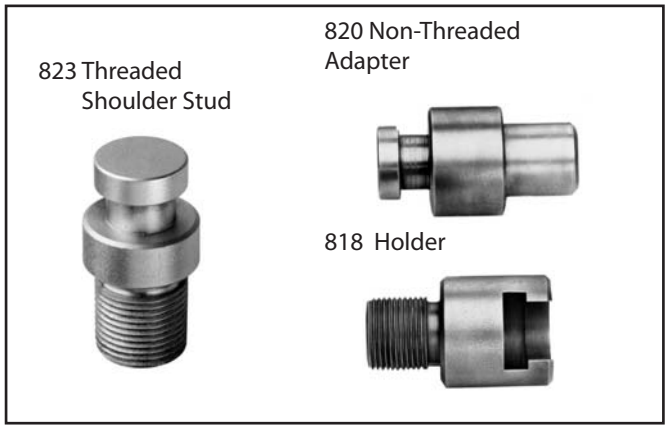

825 - Quick Trick

Huth's Quick Trick Tooling Change Adaptor Kit (Part Number 825) allows you to quickly change tooling.
The holder (Part Number 818) threads into the swager cylinder shaft of the bender, and the 10 threaded shoulder studs (Part Number 823) screw into your end-finishing tools.
Non-threaded adapter (Part Number 820) works with all non-threaded tooling.

819 Threaded Stud

819 Threaded Stud for use with Quick Trick Adapter
(Old style. Replaced by 823)

1994 Quick-Change Pin Kit for Fast Collet Holder Changes

Designed for faster collet holder changing, the Quick-Change Pin Kit eliminates the need for wrenches and prevents lost and stripped bolts when changing collet holders. Order Part Number 1994.

1994

Bend Square Tubing

Square Dies

No.	Size
5314	1-1/4" (5" Rad.)
5312	1-1/2" (5" Rad.)
4334	3/4" (4" Rad.)
4310	1" (4" Rad.)
4314	1-1/4" (4" Rad.)
3334	3/4" (3" Rad.)
3310	1" (3" Rad.)

Square Tube Back Shoe*
(2 Required)
1000 All Sizes
* (4) #855 Pins Required

Huth People

Tony Kreuser paints back shoes.

All returned parts are subject to a restocking charge.

More Accurate End-Finishing with Huth's Accu-Sizer™

Huth's Accu-Sizer™ preset expanding system, standard on all new Huth Benders, is available as a retro-fit kit for benders built before August of 1988, which have a 3" swager cylinder.
Accu-Sizer features:

- Accurate bull's-eye adjustments for precise expansions time after time
- Form-fitting segment sets
- Two detachable tips for the new arbor

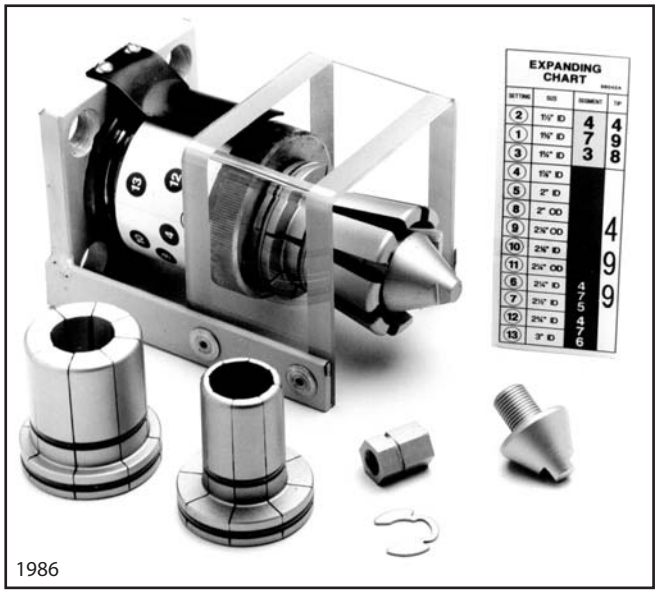

1986

Huth's Accu-Sizer Consists of:

No.	Description
508	Arbor 1-1/2" to 3-1/2"
498	Arbor Tip 1-1/2" to 1-3/4"
499	Arbor Tip 1-3/4" to 3-1/2"
473	Segment 1-1/2" to 1-3/4"
474	Segment 1-3/4" to 2-1/8"
475	Segment 2-1/8" to 2-1/2"
513	Snap Ring Nut
514	Snap Ring
515	Set Screw
522	Adjustable Collar
595	Gun Sight
98042	Sizing Decal
98043	Calibration Decal
41042	Safety Guard
97240	Machine Screw (2)

You will also receive installation and calibration instructions.

Model 1986 - for 3" Swager Cylinders
Model 1990 - for 3½" Swager Cylinders

Huth's Space Makers Give You Room to Make Those Tough, Close Bends Faster, Easier And Better

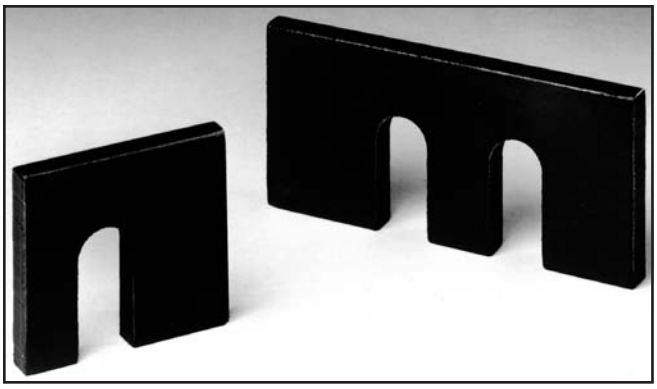
1080 Half Shoe on Left, 1079 Full Shoe on Right

Those of you who own benders with squared-off swing gates rather than cutout swing gates will really like these simple, slip-in spacers.

They nearly duplicate the action of the cutout gates by moving the back shoes and the pipe farther from the gates during bending operations.

Space Makers help you contend with that second close bend with ease and without any die interference whatsoever (provided that the bending radius doesn't exceed 4"). Nor do they interfere with safety guards.

You can use these spacers with a half shoe and a full shoe in any tube diameter. Plus, you can substitute a three-quarter shoe for the half-shoe. (Bending clearance may not be as great.)

All returned parts are subject to a restocking charge.

Huth's Program Cards

More than 7,500 strong...Huth's program cards enable even the beginning installer to start with a stick of tubing and end up with an OE-fit pipe.

Since their inception, Huth's program cards, Part Number 950 (Cards) and 980 (electronic format for IBM computers), have not only been the most timely but have also been the most accurate in the industry. Here's why:

- First, Huth R&D technicians take specifications directly from the pipes on the vehicles the cards are intended for.
- Then they form the replacement pipes on Huth Benders.
- Finally, they test the replacement pipes on the vehicles themselves - before the cards are approved for use. That's whythese copyrighted cards define precision bending.

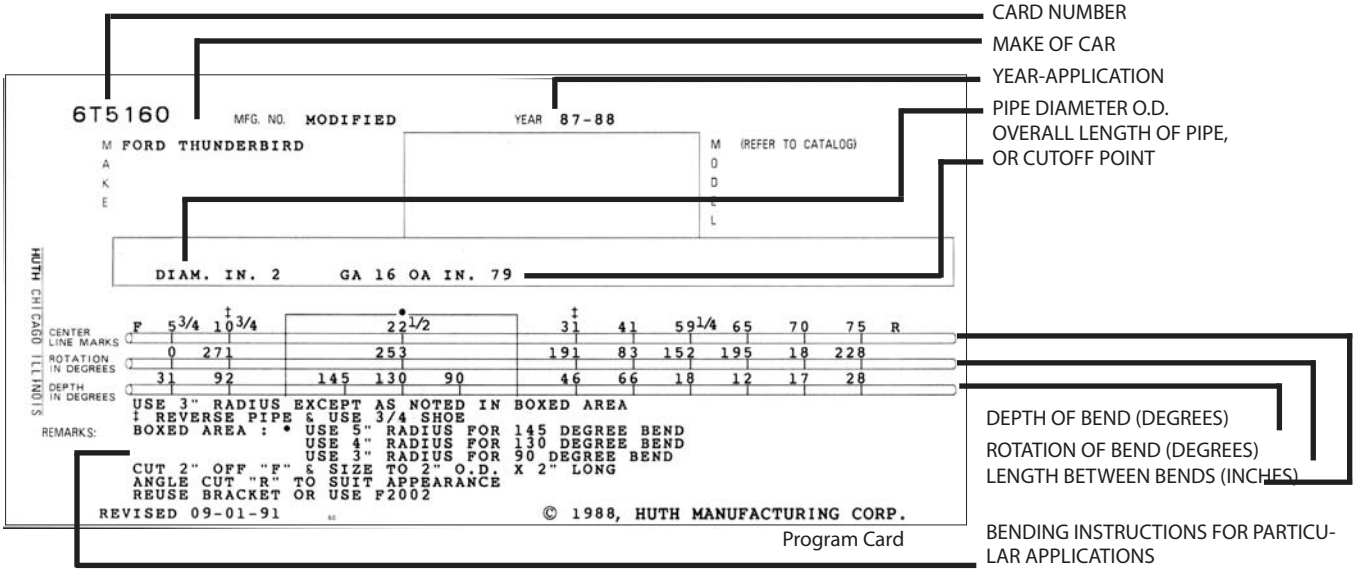

Huth's Program Cards in electronic format (Part number 980) puts all of Huth's program cards at your disposal. For IBM-compatible computers.

996 Rotation Dial

Huth's Blank Cards (Part number 952) allow you to easily record your own custom bending patterns for easy reference.

No.	Description
950*	Program Card System (Paper)
980*	Program Card System (Electronic Format) for IBM computers
951*	Program Card Subscription (Paper)
981*	Program Card Subscription (Electronic Format)
952*	Program Card (Blank)
988	Card Cabinet
995	Program Card Tray
996	Rotation Dial
998*	Card Sleeves (Pkg. 1000)

*Not Shown

995 Program Card Tray

988 Card Cabinet

Tooling -

All Huth tooling is machined to unmatched tolerances from solid steel. After it is machined, it is gas-carburized and oil quenched to a minimum hardness of 58 Rockwell "C" scale. We do not use cast iron for any of our tooling.

All Huth tooling is available from shelf stock. However, Huth will manufacture tooling to your specifications for sizes not listed in this schedule. Call factory for details. 800-558-7808.

Packages -

Huth has combined the tooling you'll be reaching for most often, into comprehensive, convenient tooling packages. Our Profit Packages, including our new Metric Profit Package - 016, combine the tooling for bending and end-finishing with the accessories you need to get the most from your bender. Some of these packages even include Huth's exclusive Program Card Bending System, containing all the information you need to bend pipes for thousands of applications.

Profit Package 010

Radius Dies

Part	Radius	Size
5200*	5″	(2″)
5414*	5″	(2¼″)
5412*	5″	(2½″)
4112	4″	(1½″)
4134	4″	(1¾″)
4200	4″	(2″)
4414	4″	(2¼″)
3200	3″	(2″)

*Requires 41041 retainer.

Back Shoes

Part	Pcs.	Size
1112	(2)	(1½″)
1134	(2)	(1¾″)
1200	(2)	(2″)
4211	(2)	(2¼″)
4412	(2)	(2½″)

Half Shoes

1038	(1½″)
1040	(1¾″)
1045	(2″)
4416	(2¼″)
4410	(2½″)

Collet Sets

1712	(1½″)
1734	(1¾″)
1720	(2″)
1725	(2¼″)
1750	(2½″)

Ball Joint Tooling

555	(1¾″, 1 7/8″, 2″) Female
556	(2¼″, 2½″) Female

Arbor

508	(1½″ to 3½″)
498	(Tip: 1½″ to 1¾″)
499	(Tip: 1¾″ to 3½″)

Segment Sets

473	(1½″ to 1¾″)
474	(1¾″ to 2 1/8″)
475	(2 1/8″ to 2½″)

Accessories

815	Die Holder
816	Die Holding Pin
835	Tube Cutter
853	Flaring/ Flanging Tool
855	Die Pins (25)

Profit Package 011

Radius Dies

Part	Radius	Size
5530*	5″	(3″)
5200*	5″	(2″)
5414*	5″	(2¼″)
5412*	5″	(2½″)
4134	4″	(1¾″)
4200	4″	(2″)
4414	4″	(2¼″)
4409	4″	(2½″)
3112	3″	(1½″)
3134	3″	(1¾″)
3200	3″	(2″)

*Requires 41041 retainer.

Back Shoes

Part	Pcs.	Size
1112	(2)	(1½″)
1134	(2)	(1¾″)
1200	(2)	(2″)
4211	(2)	(2¼″)
4412	(2)	(2½″)
1350	(2)	(3″)

Half Shoes

1038	(1½″)
1040	(1¾″)
1045	(2″)
4416	(2¼″)
4410	(2½″)

Three-Quarter Shoes

1046	(2″)
4413	(2¼″)

Swage Dies

112	(1½″)
134	(1¾″)
178	(1 7/8″)
120	(2″)
125	(2¼″)
150	(2½″)

Collet Sets

1712	(1½″)
1734	(1¾″)
1720DF	(2″)
1725	(2¼″)
1750	(2½″)

Ball Joint Tooling

555	(1¾″, 1 7/8″, 2″) Female
556	(2¼″, 2½″) Female

Ball Joint Segments

419	(2″)
420	(2¼″)
421	(2½″)

Flaring Tool

518	(2″)

Arbor

508	(1½″ to 3½″)
498	(Tip: 1½″ to 1¾″)
499	(Tip: 1¾″ to 3½″)

Segment Sets

473	(1½″ to 1¾″)
474	(1¾″ to 2 1/8″)
475	(2 1/8″ to 2½″)
476	(2½″ to 3″)

Accessories

825	Quick Disconnect Kit
835	Tube Cutter
853	Flaring/ Flanging Tool
855	Die Pins (36)
996	Rotation Dial
97091	Steel Ruler
97092	Huth Marking Pen
950	Program Card System
OR 980	Program Card System in Electronic Format

Profit Package 013

Radius Dies

Part	Radius	
5112*	5″	(1½″)
5134*	5″	(1¾″)
5820*	5″	(2″) 180°
5824*	5″	(2¼″) 180°
5412*	5″	(2½″)
5530*	5″	(3″)
4112	4″	(1½″)
4134	4″	(1¾″)
4200	4″	(2″)
4414	4″	(2¼″)
4409	4″	(2½″)
3112	3″	(1½″)
3134	3″	(1¾″)
3200	3″	(2″)
3414	3″	(2¼″)

*Requires 41041 retainer

Back Shoes

Part	Pcs.	
1112	(2)	(1½″)
1134	(2)	(1¾″)
1200	(2)	(2″)
4211	(2)	(2¼″)
4412	(2)	(2½″)
1350	(2)	(3″)

Three-Quarter Shoes

1036	(1¾″)
1046	(2″)
4413	(2½″)
4415	(2½″)
1351	(3″)

Half Shoes

1038	(1½″)
1040	(1¾″)
1045	(2″)
4416	(2¼″)
4410	(2½″)
1352	(3″)

Reducing Dies

780	(2″ to 1¾″)
781	(2¼″ to 2″)
782	(2½″ to 2¼″)
783	(3″ to 2½″)

Collet Sets

1712	(1½″)
1734	(1¾″)
1720	(2″)
1725	(2¼″)
1750	(2½″)
1730	(3″)

Swage Dies*

112	(1½″)
134	(1¾″)
178	(1 7/8″)
130	(3″)

*For 2″, 2¼″, and 2½″ ID's use male ball joint tools 550, 552, 553

Ball Joint Tooling

550	(1¾″) Male
552	(2″) Male
553	(2¼″) Male
554	(2½″) Male
555	(1¾″, 1 7/8″, 2″) Female
556	(2¼″, 2½″) Female
557	(1¾″ to 2½″) Domer
558	(2½″ to 2¾″) Domer

Arbor

508	(1½″ to 3½″)
498	(Tip-1½″ to 1¾″)
499	(Tip-1¾″ to 3½″)

Flaring Segment 45°

440	(1½″ to 2½″)

Segment Sets

473	(1½″ to 1¾″)
474	(1¾″ to 2 1/8″)
475	(2 1/8″ to 2½″)
476	(2½″ to 3″)

Accessories

815	Die Holder
816	Die Holding Pin
825	Quick-Disconnect Kit
835	Tube Cutter
852	Blank Plate
853	Flaring/Flanging Tool
855	Die Pins (41)
870	O-Rings-Rubber Asst.
892	Collet Holder
996	Rotation Dial
1994	Quick Change Pin Kit
97091	Steel Ruler
97092	Huth Marking Pen
950	Program Card System
OR	
980	Program Card System in Electronic Format

Profit Package 016 - Export

Radius Dies

Part	Radius	
5040	5″	(40mm)
5042	5″	(42mm)
5045	5″	(45mm)
5048	5″	(48mm)
5050	5″	(50mm)
5218	5″	(54mm)
5060	5″	(60mm)
4040	4″	(40mm)
4042	4″	(42mm)
4045	4″	(45mm)
4048	4″	(48mm)
4050	4″	(50mm)
4218	4″	(54mm)
4060	4″	(60mm)
3040	3″	(40mm)
3042	3″	(42mm)
3045	3″	(45mm)
3048	3″	(48mm)
3050	3″	(50mm)
3218	3″	(54mm)

Back Shoes

1340	(2)	(40mm)
1342	(2)	(42mm)
1345	(2)	(45mm)
1348	(2)	(48mm)
1349	(2)	(50mm)
1218	(2)	(54mm)
1360	(2)	(60mm)

Three-Quarter Shoes

1540	(40mm)
1542	(42mm)
1545	(45mm)
1548	(48mm)
1550	(50mm)
1053	(54mm)
1560	(60mm)

Half Shoes

1405	(40mm)
1425	(42mm)
1455	(45mm)
1448	(48mm)
1450	(50mm)
1051	(54mm)
1460	(60mm)

Swage Dies

140	(40mm)
142	(42mm)
145	(45mm)
148	(48mm)
149	(50mm)
128	(54mm)
160	(60mm)

Collet Sets

1740	(40mm)
1742	(42mm)
1745	(45mm)
1700	(48mm)
1705	(50mm)
1728	(54mm)
1760	(60mm)

Ball Joint Segments

419	(50mm)
420	(55mm)
421	(60mm)

Arbor

508	(35mm to 89mm ID)
498	(Tip: 35mm to 40mm ID)
499	(Tip: 40mm to 89mm ID)

Segment Sets

473	(35mm to 45mm ID)
474	(45mm to 54mm ID)
475	(54mm to 64mm ID)
476	(64mm to 76mm ID)

Reducing Dies

760 (50mm to 45mm OD)
761 (55mm to 50mm OD)
762 (60mm to 55mm OD)

Accessories

815	Die Holder
816	Die Holding Pin
825	Quick-Disconnect Kit
835	Tube Cutter
853	Flaring/Flanging Tool
855	Die Pins (42)
984	Pipe End Shaper
996	Rotation Dial
91176	Ready Rak II
97091	Steel Ruler
97092	Huth Marking Pen

All returned parts are subject to a restocking charge

1992 - 3″ Tooling Package

For use on benders with 700 Series or 1700 Series Collets with a clamp style collet holder. (Standard on all Huth Bender models from September 1981 to present.)

5530	Radius Die
1350	Back Shoe (2)
1351	Three-Quarter Shoe
1352	Half Shoe
855	Die Pins (6)
892	Collet Holder
1730	Collet
853	Flaring/ Flanging Tool
783	Reducer (3″ to 2½″)
130	Swage Die
*476	Segment Set (2½″ to 3″)

*Requires Arbor 508 and Arbor Tip 499

1993 - 3″ Tooling Package

For use on benders with 200 Series Collets with either a cam action or spin close collet holder. (Standard on all Huth Bender models from 1955 to September 1981.)

5530	Radius Die
1350	Back Shoe (2)
1351	Three-Quarter Shoe
1352	Half Shoe
855	Die Pins (6)
508	Arbor, 1-1/2″ to 3-1/2″
499	Arbor Tip
476	Segment Set (2½″ to 3″)

1995 - 2¾″ Tooling Package

For use on benders with 700 Series or 1700 Series Collets with a clamp style collet holder. (Standard on all Huth Bender models from September 1981 to present.)

5534	5″ Radius Die
1234	Back Shoe (2)
1235	Three-Quarter Shoe
1236	Half Shoe
855	Die Pins (6)
1729*	Collet
790	Reducer (3″ to 2¾″)
129	Swage Die

*Requires 892 Collet Closer

1996 - 3″ Short Tooling Package

5530	5″ Radius Die
1350	Back Shoe (2)
855	Die Pins (4)

One of the following:

1351	Three-Quarter Shoe
1352	Half Shoe
*476	Segment Set (2½″ to 3″)

*Requires Arbor 508 and Arbor Tip 499

1997 - 2¾″ Short Tooling Package

5534	5″ Radius Die
1234	Back Shoe (2)
855	Die Pins (4)

One of the following:

1235	Three-Quarter Shoe
1236	Half Shoe
*476	Segment Set (2½″ to 3″)

*Requires Arbor 508 and Arbor Tip 499

1988 - 3″ End-Finishing Package

Designed for benders which utilize 700 or 1700 series collets to perform 3″ swaging. 1988 package includes:

892	Collet Holder
1730	Collet
130	Swage Die
783	Reducer (3″ to 2½″)
853	Flaring/Flanging Tool

1989 - 1 7/8″ Optional Package

4178	Radius Die (4″)
178	Swage Die
1178	Back Shoe (2 pcs)
1043	Half Shoe
1778	Collet Set
855	Die Pins (5 pcs)

1994 Quick-Change Pin Kit

Designed for faster collet holder changing, the Quick-Change Pin Kit eliminates the need for wrenches and prevents lost and stripped bolts when changing collet holders. Order Part Number 1994.

All returned parts are subject to a restocking charge.

Huth People

Scott Metternich loading back shoes into the lathe.

Bending Dies

Full 5" Radius Dies*

No.	Size
5812	1-1/2"
5834	1-3/4"
5878	1-7/8"
5820	2"
5824	2-1/4"**
5825	2-1/2"**

** 4" Thick

* Requires 41041 Retainers

Full 4" Radius Dies

No.	Size
4858	1-5/8"
4834	1-3/4"
4820	2"

5" Radius Dies

English

No.	Size
5034	3/4"
5100	1"
5118	1-1/8"
5114	1-1/4"
5056	1-5/16"
5138	1-3/8"
5112	1-1/2"
5158	1-5/8"
5134	1-3/4"
5178	1-7/8"
5200	2"
5218	2-1/8"***
5414	2-1/4"**
5438	2-3/8"**
5412	2-1/2"**
5534	2-3/4"**
5530	3"**

** 4" Thick

Metric

No.	Size
5040	40mm
5042	42mm
5045	45mm
5048	48mm
5050	50mm
5218	54mm***
5055	55mm
5060	60mm

***2-1/8"= 54mm

All returned parts are subject to a restocking charge

4" Radius Dies

Metric

No.	Size
4040	40mm
4042	42mm
4045	45mm
4048	48mm
4050	50mm
4218	54mm***
4055	55mm
4060	60mm

***2-1/8"= 54mm

English

No.	Size
4012	1/2"
4058	5/8"
4034	3/4"
4078	7/8"
4100	1"
4118	1-1/8"
4114	1-1/4"
4056	1-5/16"
4138	1-3/8"
4112	1-1/2"
4158	1-5/8"
4134	1-3/4"
4178	1-7/8"
4200	2"
4218	2-1/8"***
4414	2-1/4"**
4438	2-3/8"**
4409	2-1/2"**

** 4" Thick

3" Radius Dies

Metric

No.	Size
3040	40mm
3042	42mm
3045	45mm
3048	48mm
3050	50mm
3218	54mm***
3055	55mm

***2-1/8"= 54mm

English

No.	Size
3012	1/2"
3058	5/8"
3034	3/4"
3078	7/8"
3100	1"
3118	1-1/8"
3114	1-1/4"
3056	1-5/16"
3138	1-3/8"
3112	1-1/2"
3158	1-5/8"
3134	1-3/4"
3178	1-7/8"
3200	2"
3218	2-1/8"***
3414	2-1/4"**
3438	2-3/8"**

** 4" Thick

Square Dies

No.	Size
5314	1-1/4" (5" Rad.)
5312	1-1/2" (5" Rad.)
4334	3/4" (4" Rad.)
4310	1" (4" Rad.)
4314	1-1/4" (4" Rad.)
3334	3/4" (3" Rad.)
3310	1" (3" Rad.)

Square Tube Back Shoe*
(2 Required)

1000	All Sizes

* (4) #855 Pins Required

Shoes

Back Shoes* (2 Required)

* (2) #855 pins required

English

No	Size
1012	1/2″
1058	5/8″
1034	3/4″
1078	7/8″
1100	1″
1118	1-1/8″
1114	1-1/4″
1256	1-5/16″
1138	1-3/8″
1112	1-1/2″
1158	1-5/8″
1134	1-3/4″
1178	1-7/8″
1200	2″
1218	2-1/8″***
4211	2-1/4″**
4237	2-3/8″**
4412	2-1/2″**
1234	2-3/4″**
1350	3″**

** 4″Thick

Metric

No.	Size
1340	40mm
1342	42mm
1345	45mm
1348	48mm
1349	50mm
1218	54mm***
1355	55mm
1360	60mm

***2-1/8″= 54mm

Half Shoes* (1 Required)

* (1) #855 pin required

Metric

No.	Size
1405	40mm
1425	42mm
1455	45mm
1448	48mm
1450	50mm
1051	54mm***
1445	55mm
1460	60mm

***2-1/8″= 54mm

No.	Size
1027	1/2″
1029	5/8″
1035	3/4″
1031	7/8″
1037	1″
1033	1-1/8″
1039	1-1/4″
1356	1-5/16″
1041	1-3/8″
1038	1-1/2″
1042	1-5/8″
1040	1-3/4″
1043	1-7/8″
1045	2″
1051	2-1/8″***
4416	2-1/4″**
4437	2-3/8″**
4410	2-1/2″**
1236	2-3/4″**
1352	3″**

** 4″Thick

Three-Quarter Shoes* (1 Required)

* (1) #855 pin required

No.	Size
1036	1-3/4″
1044	1-7/8″
1046	2″
1053	2-1/8″***
4413	2-1/4″**
4415	2-1/2″**
1235	2-3/4″**
1351	3″**

** 4″Thick

Metric

No.	Size
1540	40mm
1542	42mm
1545	45mm
1548	48mm
1550	50mm
1053	54mm***
1555	55mm
1560	60mm

***2-1/8″= 54mm

Quarter Shoes* (1 Required)

* (1) #855 pin required

No.	Size
1084	1-1/4″
1083	1-3/8″
1082	1-1/2″
1081	1-5/8″

Huth People

Bob Lechner loading a segment into the lathe.

End Finishing Tools - Swager

Swage Dies

Metric No.	Size
140	40mm
142	42mm
145	45mm
148	48mm
149	50mm
128	54mm***
155	55mm
160	60mm

English No.	Size
110	1″
118	1-1/8″
114	1-1/4″
138	1-3/8″
112	1-1/2″
158	1-5/8″
134	1-3/4″
178	1-7/8″
120	2″
128	2-1/8″***
125	2-1/4″
123	2-3/8″
150	2-1/2″
129	2-3/4″
130	3″

***2-1/8″= 54mm

Reducing Dies*

* Requires clamp collet 890 or 891

No.	Size
780	2″ to 1-3/4″
781	2-1/4″ to 2″
782	2-1/2″ to 2-1/4″
783	3″ to 2-1/2″
784	2″ to 1-7/8″
785	1-3/4″ to 1-5/8″
786	1-5/8″ to 1-1/2″
787	1-1/2″ to 1-3/8″
788	1-3/8″ to 1-1/4″
789	1-1/4″ to 1-1/8″
790	3″ to 2-3/4″

Metric No.	Size
760	(50mm to 45mm OD)
761	(55mm to 50mm OD)
762	(60mm to 55mm OD)

Ball Joint Tools

550

555

557

No.	Size
550	1-3/4″ (Male)
551	1-7/8″ (Male)
552	2″ (Male)
553	2-1/4″ (Male)
554	2-1/2″ (Male)
557	1-3/4″ to 2-1/2″ (Domer)
558	2-5/8″ to 2-3/4″ (Domer)
555	1-3/4″, 1-7/8″, 2″ (Female)
556	2-1/4″ to 2-1/2″ (Female)
564	2-3/4″ to 3″ (Female)

Flaring/Flanging Tools

518

519

853

No.	Description
518	Flare Tool 1-1/2″, 2″ (2″ requires 1720DF)
519	Flare Tool 1-3/4″, 1-5/8″
853	Pipe Flanger 1-1/2″ to 3″ (Replaces Pipe Flangers 848, 849, 850, 851)

Header Collector Tool

No.	Size
101	3″
102	3-1/2″

Clamp Collets (All Models After Jan '85)

Metric No.	Size
1740	40mm
1742	42mm
1745	45mm
1700	48mm
1705	50mm
1728	54mm***
1755	55mm
1760	60mm

*Requires 892 Collet Holder

English No.	Size
1710	1″
1718	1-1/8″
1714	1-1/4″
1756	1-5/16″
1738	1-3/8″
1712	1-1/2″
1758	1-5/8″
1734	1-3/4″
1778	1-7/8″
1720	2″
1720DF	2″
1728	2-1/8″***
1725	2-1/4″
1723	2-3/8″
1750	2-1/2″
1729	2-3/4″*
1730	3″*

***2-1/8″= 54mm

End Finishing Tools - Swager

Clamp Collets
(All Models From Sept. '81 to Jan. '85)

No.	Size
710	1"
718	1-1/8"
714	1-1/4"
738	1-3/8"
712	1-1/2"
758	1-5/8"
734	1-3/4"
778	1-7/8"
720	2"
728	2-1/8"
725	2-1/4"
723	2-3/8"
750	2-1/2"

Clamp Collets
(All Models 1955-Sept. '81)

No.	Size
210	1"
218	1-1/8"
214	1-1/4"
238	1-3/8"
212	1-1/2"
258	1-5/8"
234	1-3/4"
278	1-7/8"
220	2"
228	2-1/8"
225	2-1/4"
223	2-3/8"
250	2-1/2"

Clamp Collet System

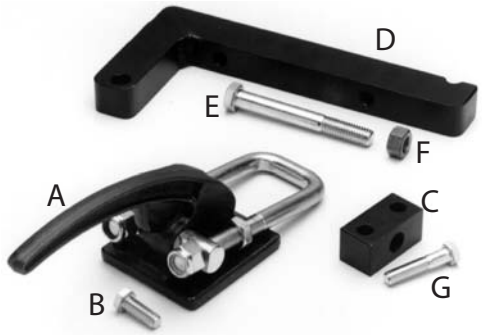

A.	97176	Collet Closer Clamp
B.	97267	Bolt 3/8"-16 x 1" (qty. 4)
C.	91061	Collet Hinge Block (qty. 2)
D.	91060	Collet Closer Arm
E.	97232	Bolt for 91060, 1/2"-13 x 4"
F.	97208	Nut-1/2"-13
G.	97231	Bolt 3/8"-16 x 1-3/4" (qty. 6)

Collet Closers
Clamp Closer

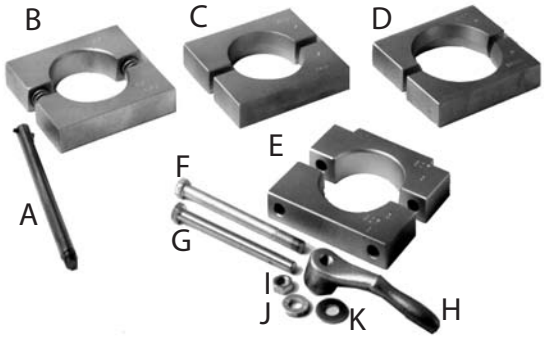

A	808	Long Handle-9"
B.	884	Collet Holder (Uses 200 Series Collets)
C.	890	Collet Holder (Uses 700 Series Collets)
D.	891	Collet Holder (After 2-85 Uses 1700 Series Collets)
E.	807*	Collet Holder (Uses 200 Series Collets)
F.	809	Bolt, 6"
G.	810	Bolt 5-1/2"
H.	804	Handle
I.	812	Nut
J.	811	Washer
K.	813	Washer, Brass
	817	Handle, 12" (not shown)
	892	Collet Holder (not shown), 2-3/4", 3" for 1729, 1730 Collets
	1985	Collet/Closer Kit with 1712, 1720, 1725, 1734, 1778, 1750, 891 (not shown)

*Complete Kit includes F through K

All returned parts are subject to a re-stocking charge

End-Finishing Tools - Expander

Accu-Sizer™ System

498, 499 508 477, 476, 475, 474, 473

No.	Size
508	Arbor, 1-3/8" to 3-1/2"
498	Tip: 1-1/2" to 1-3/4"
499	Tip: 1-3/4" to 3-1/2"
473	Segment 1-3/8" to 1-3/4" (YELLOW)
474	Segment 1-3/4" to 2-1/8" (RED)
475	Segment 2-1/8" to 2-1/2" (BLACK)
476	Segment 2-1/2" to 3" (GREEN)
477	Segment 3" to 3-1/2"
	All sizes are I.D.

45° Flaring

441, 440, 405

405	Flaring Segment Set* 1-1/8" to 1-1/2" Tube
440	Flaring Segment Set 1-1/2" to 2-1/2" Tube
441	Flaring Segment Set 2-1/2" to 3-1/2" Tube
	*Requires 575 Arbor 570 Spacer

Pre Accu-Sizer™ System

502, 501, 425, 422, 423, 424

500, 400

575, 570, 470, 404

No.	Size
575*	Arbor 15/16" to 1-1/4"
500	Arbor 1-1/4" to 1-1/2"
501	Arbor 1-1/2" to 1-3/4"
502	Arbor 1-3/4" to 2-3/4"
503	Arbor 2-3/4" to 5-1/2"
470	Segment 1-5/16" to 1-3/32"
404	Segment 1-3/32" to 1-1/4"
400	Segment 1-3/16" to 1-1/2"
422	Segment 1-1/2" to 1-3/4"
423	Segment 1-3/4" to 2-1/8"
424	Segment 2-1/8" to 2-1/2"
425	Segment 2-1/2" to 2-3/4"
403	Segment 2-3/4" to 3-1/8"
406	Segment 3-1/8" to 3-1/2"
408	Segment 3-1/2" to 4"
450	Segment 4" to 4-7/8"
451	Segment 4-7/8" to 5-1/2"

All sizes are I.D.

*570 Spacer Required

503, 451,450, 403, 406, 408

End-Finishing Tools - Expander

5" Cylinder Tooling

574, 484, 485, 486,
481, 482, 483

No.	Size
574*	Arbor 2-7/8" to 6"
481	Segment 2-7/8" to 3-1/2"
482	Segment 3-3/8" to 4"
483	Segment 3-7/8" to 4-1/2"
484	Segment 4-3/8" to 5"
485	Segment 4-7/8" to 5-1/2"
486	Segment 5-3/8" to 6"

All sizes are I.D.

Flanges

411

413

No.	Size
411	Segment 2", 2-1/4"
413	Flange Ring 2"
414	Flange Ring 2-1/4"
412	Segment 2-1/2"
418	Flange Ring 2-1/2"

Ball Joints

419

No.	Size
410	Segment 1-3/4"
419	Segment 2"
420	Segment 2-1/4"
421	Segment 2-1/2"
452	Segment 3"

O-Rings, Rubber

No.	Size
870	Assortment of 50 (10 each size) for Segment Sets: 400, 403, 404, 405, 406, 408, 410, 411, 412, 419, 420, 421, 422, 423, 424, 425, 440, 441, 452, 470, 473,474, 475, 476, 477, 570 Spacer for Arbor 575
871	Assortment of 10 (2 each size) for Segment Sets: 400, 403, 404, 405, 406, 408, 410, 411, 412, 419, 420, 421, 422, 423, 424, 425, 440, 441, 452, 470, 473, 474, 475, 476, 477, 570 Spacer for Arbor 575

O-Rings, Steel

No.	Size
859	Assortment of 25 (5 each size) for Segment Sets: 400, 403, 406, 408, 410, 411, 412, 419, 420, 421, 422, 423, 424, 425,440, 450, 451, 452, 470, 473, 474, 475, 570 Spacer for Arbor 575

O-Rings, Urethane

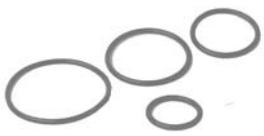

No.	For Segments
872	481
873	482
875	483
877	408, 450
878	450, 481, 482
879	451, 483, 485
880	451, 484, 486
881	484
882	485, 486

Huth Expanding Tool Chart

A Ready Reference For Matching Tools to Their Arbors

For The Accu-Sizer™

Size	Arbor	Tip	Seg. Set	Collar
1-3/8″ to 1-3/4″	508	498	473	41047
1-3/4″ to 2-1/8″	508	499	474	41047
2-1/8″ to 2-1/2″	508	499	475	41047
2-1/2″ to 3″	508	499	476	41047
3″ to 3-1/2″	508	499	477	41047

All sizes are I.D.

For 45° Flaring Work*

Size	Arbor	Tip	Seg. Set	Collar
1-1/8″ to 1-1/2″	575*		405	41047
1-1/2″ to 2-1/2″	508	499	440	41047
2-1/2″ to 3-1/2″	508	499	441	41047

*Requires 570 Spacer

For Making Ball Joints*

Size	Arbor	Tip	Ball Joint Tool	Collar
1-3/4″	508	499	410	41047
2″	508	499	419	41047
2-1/4″	508	499	420	41047
2-1/2″	508	499	421	41047
3″	508	499	452	41047

5″ Cylinder Tooling for Model 1674

Size	Arbor	Seg. Set	Collar
2-7/8″ - 3-1/2″	574	481	527
3-3/8″ - 4″	574	482	527
3-7/8″ - 4-1/2″	574	483	527
4-3/8″ - 5″	574	484	527
4-7/8″ - 5-1/2″	574	485	527
5-3/8″ - 6″	574	488	527

For Expansion Work

Size	Arbor	Seg. Set	Collar
15/16″ to 1-3/32″	575**	470	41047***
1-3/32″to 1-1/4″	575**	404	41047***
1-3/16″ to 1-1/2″	500	400	41047***
1-1/2″ to 1-3/4″	501	422	41047***
1-3/4″ to 2-1/8″	502	423	41047***
2-1/8″ to 2-1/2″	502	424	41047***
2-1/2″ to 2-3/4″	502	425	41047***
2-3/4″ to 3-1/8″	503	403	523*
3-1/8″ to 3-1/2″	503	406	523
3-1/2″ to 4″	503	408	523
4″ to 4-7/8″	503	450	523
4-7/8″ to 5-1/2″	503	451	523

*512 Adjustable Collar is for a 3″ Swager Cylinder
** Requires a 570 Spacer
*** 41046 - Adjustable Collar is for a 3″ Swager Cylinder
41047 - Adjustable Collar is for 3-1/2″ Swager Cylinder

All sizes are I.D.

For Flanges*

Size	Tip	Arbor	Seg. Set Flange	Collar
2″	499	508	411 W/413 Flange Ring	41047
2-1/4″	499	508	411 W/414 Flange Ring	41047
2-1/2″		499	508412 W/418 Flange Ring	41047

Huth People

Tom McKinley cutting material to length.

Keith Lucht preparing a part for machining center.

Silhouette Chart - Segment Set Teeth

These silhouettes are full scale. To identify the tooth you need, simply match it up with its mate on these pages. You'll get its part number, the part of the segment it belongs to, plus the part numbers and quantity of stainless steel, urethane and/or rubber O-Rings to use.

Expanding Segment Teeth

Tooth	600
Segment	400
O-Rings:	
Steel	1-867
Rubber	1-862

Tooth	603
Segment	403
O-Rings:	
Steel	1-868
	1-869
Rubber	1-863
	1-864

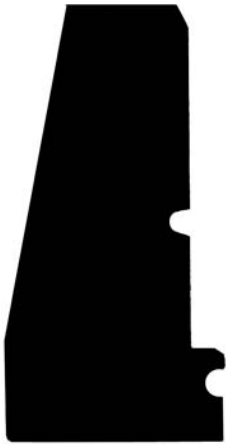

Tooth	606
Segment	406
O-Rings:	
Steel	2-869
Rubber	2-864

Tooth	608
Segment	408
O-Rings:	
Rubber	1-864
Urethane	1-877

Tooth	622
Segment	422
O-Rings:	
Steel	1-865
	1-867
Rubber	1-860
	1-862

Tooth	623
Segment	423
O-Rings:	
Steel	1-866
	1-868
Rubber	1-861
	1-863

All returned parts are subject to a restocking charge

Silhouette Chart - Segment Set Teeth

Tooth	624
Segment	424
O-Rings:	
Steel	1-867
	1-868
Rubber	1-862
	1-863

Tooth	625
Segment	425
O-Rings:	
Steel	1-868
	1-869
Rubber	1-863
	1-864

Tooth	650
Segment	450
O-Rings:	
Urethane	1-878
	2-877

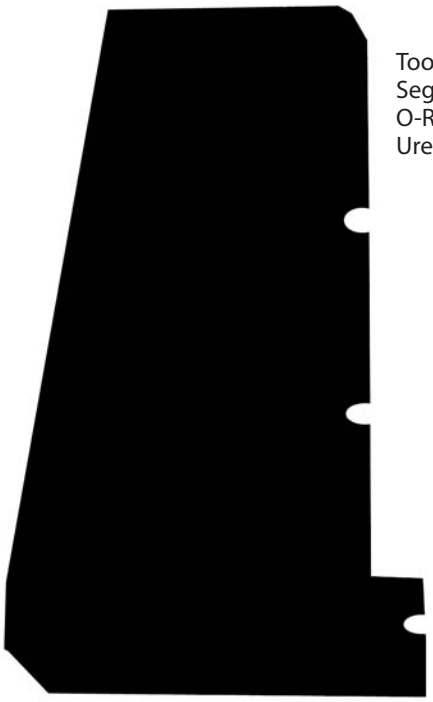

Tooth	651
Segment	451
O-Rings:	
Urethane	1-880
	2-879

Tooth	670
Segment	470
O-Rings:	
Steel	1-867
Rubber	1-862

Tooth	604
Segment	404
O-Rings:	
Steel	1-867
Rubber	1-862

All returned parts are subject to a restocking charge

Silhouette Chart - Segment Set Teeth

Tooth	673
Segment	473
O-Rings:	
Steel	1-874
	1-867
Rubber	1-860
	1-862

Tooth	674
Segment	474
O-Rings:	
Steel	1-866
	1-868
Rubber	1-861
	1-863

Tooth	675
Segment	475
O-Rings:	
Steel	1-867
	1-868
Rubber	1-862
	1-863

Tooth	676
Segment	476
O-Rings:	
Steel	1-868, 1-869
Rubber	1-863, 1-864

Tooth	677
Segment	477
O-Rings:	
Steel	2-869
Rubber	2-864

Flaring Segment Teeth

Tooth	640
Segment	440
O-Rings:	
Steel	1-868
	1-869
Rubber	1-863
	1-864

Silhouette Chart - Segment Set Teeth

Tooth	605
Segment	405
O-Rings:	
Steel	1-867
Rubber	1-862

Tooth	620
Segment	420
O-Rings:	
Steel	2-869
Rubber	2-864

Ball-Joint Segment Teeth

Tooth	610
Segment	410
O-Rings:	
Steel	2-869
Rubber	2-864

Tooth	621
Segment	421
O-Rings:	
Steel	2-869
Rubber	2-864

Tooth	619
Segment	419
O-Rings:	
Steel	2-869
Rubber	2-864

Tooth	652
Segment	452
O-Rings:	
Steel	3-869
Rubber	3-864

Silhouette Chart - Segment Set Teeth

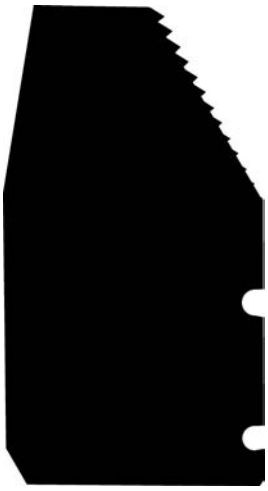

Tooth	641
Segment	441
O-Rings:	
Steel	869
Rubber	864

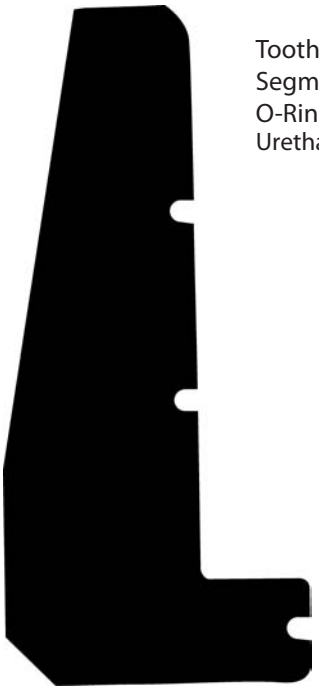

Tooth	682
Segment	482
O-Rings:	
Urethane	1-878
	2-873

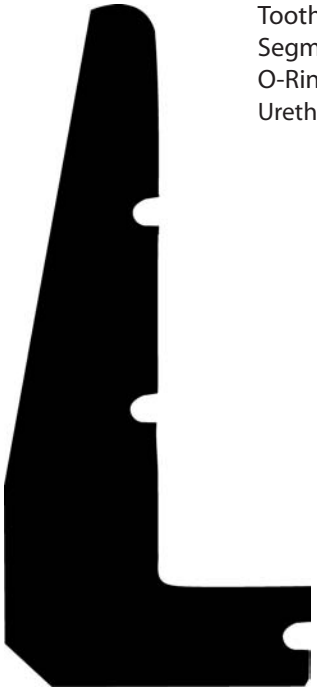

Tooth	681
Segment	481
O-Rings:	
Urethane	1-878
	2-872

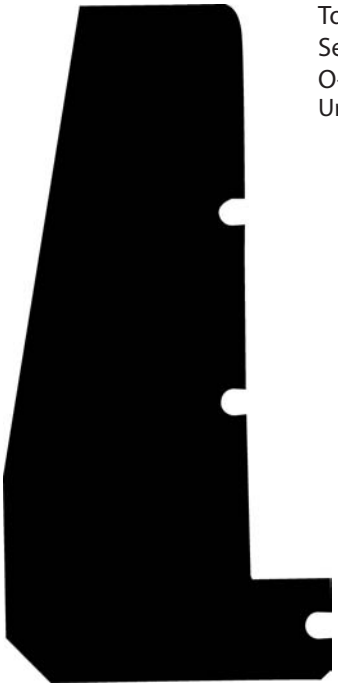

Tooth	683
Segment	483
O-Rings:	
Urethane	1-879
	2-875

Silhouette Chart - Segment Set Teeth

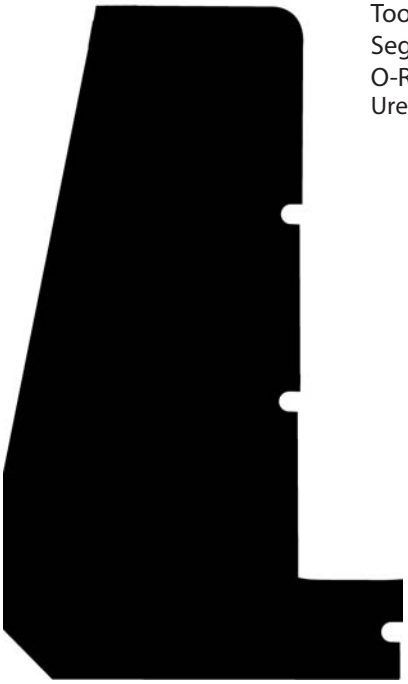

Tooth	684
Segment	484
O-Rings:	
Urethane	1-880
	2-881

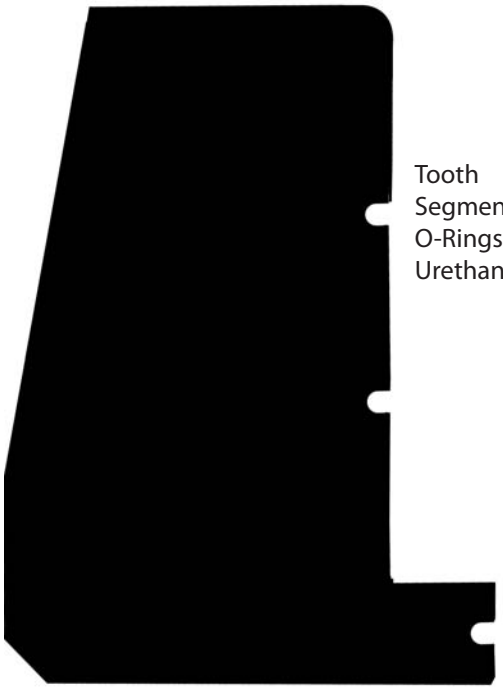

Tooth	686
Segment	486
O-Rings:	
Urethane	1-882
	2-880

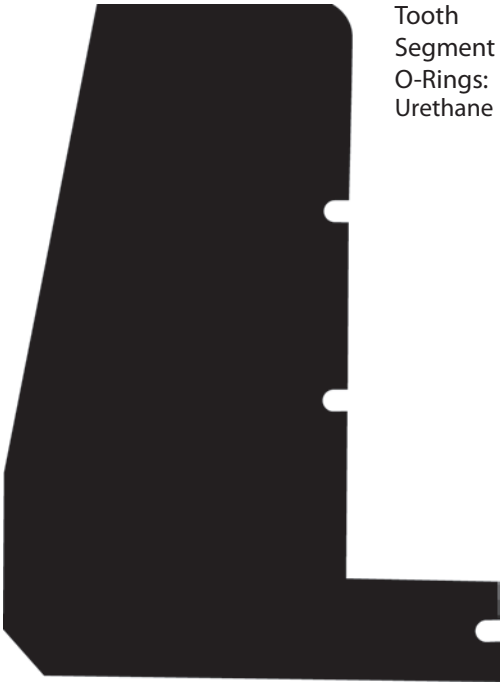

Tooth	685
Segment	485
O-Rings:	
Urethane	1-882
	2-879

Silhouette Chart - Segment Set - O-Rings

Spacer for Arbor 575

Segment570
O-Rings:

Steel	1-865
Rubber	1-860

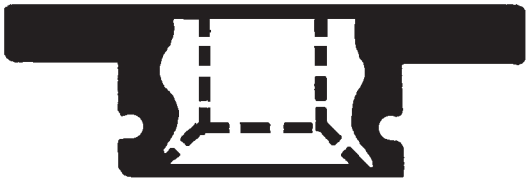

Flanging Segment Teeth

Tooth 611
Segment411
O-Rings:

Steel	1-865
	1-869
Rubber	1-860
	1-864

Tooth 612
Segment412
O-Rings:

Steel	1-867
	1-869
Rubber	1-862
	1-864

O-Rings

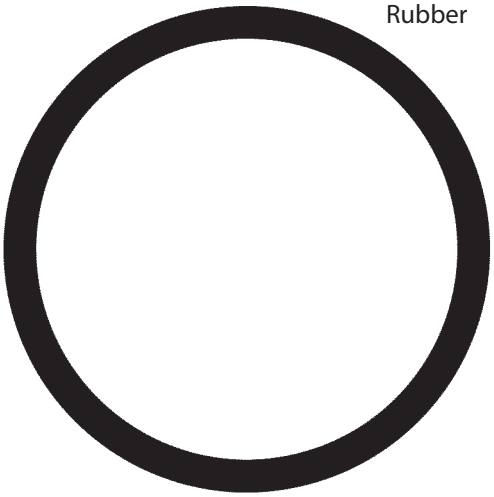

Steel 869
Rubber 864

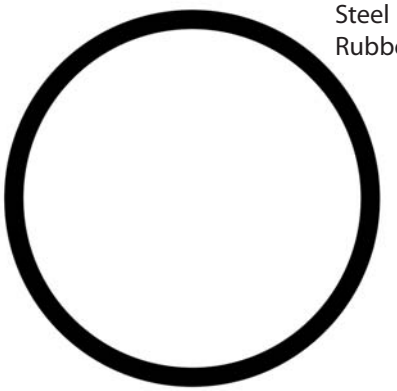

Steel 868
Rubber 863

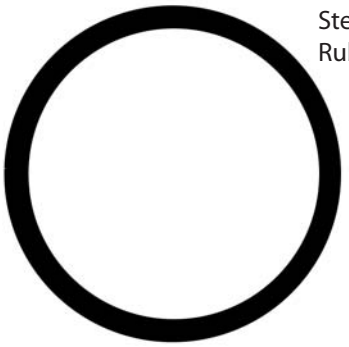

Steel 867
Rubber 862

Silhouette Chart - O-Rings

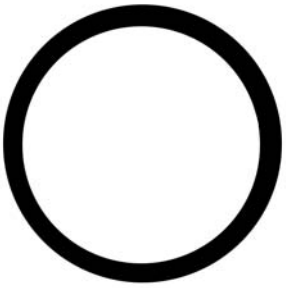

Steel	866
Rubber	861

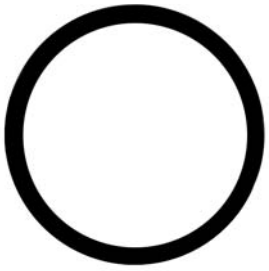

Steel	865
Rubber	860

Urethane O-Rings

A.	882
B.	880
C.	879
D.	878
E.	881
F.	877
G.	875
H.	873
I.	872

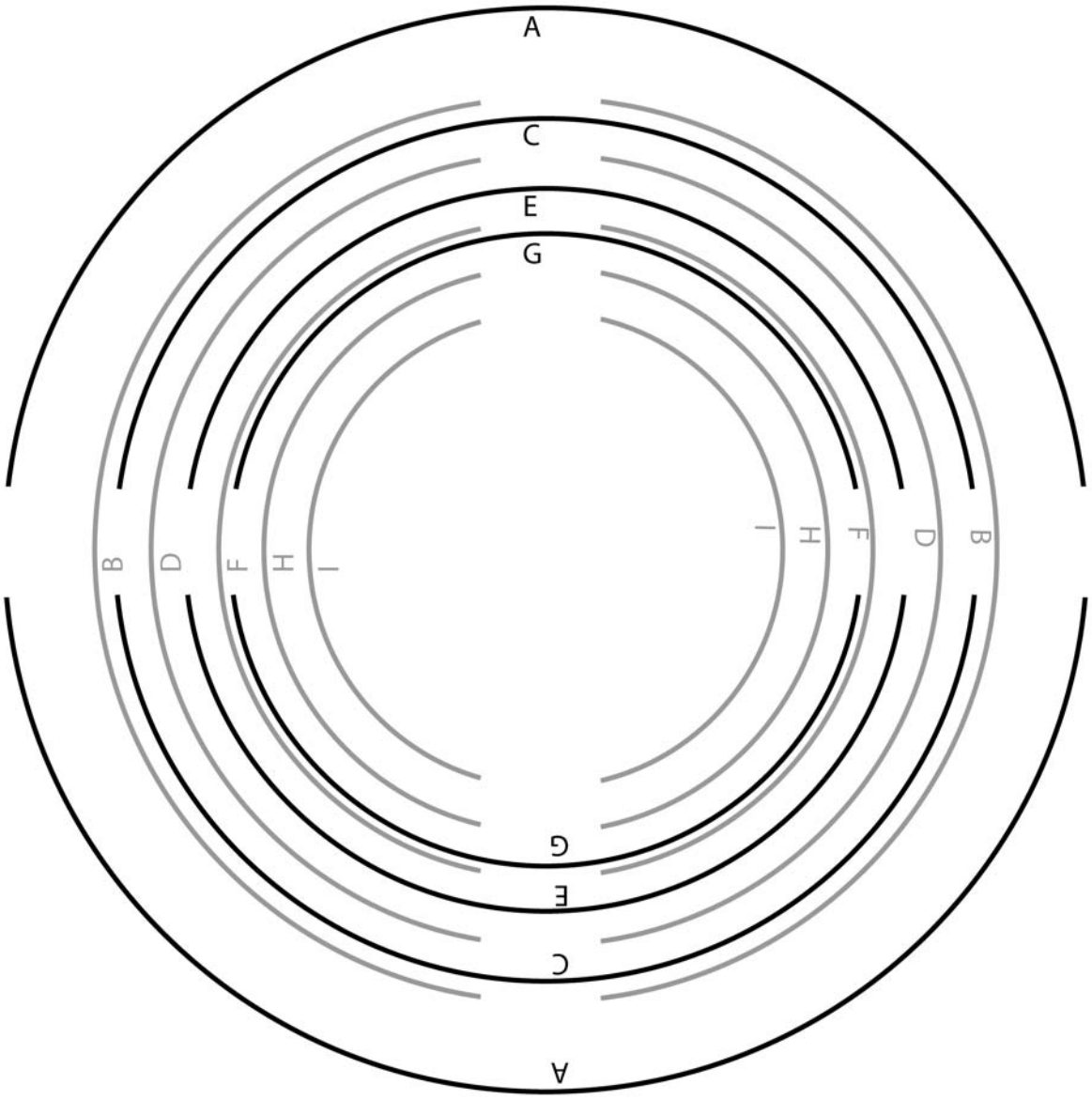

Bending Accessories

800 Pusher Block

852 Blank Plate

No.	Description
800	Pusher Block
852	Blank Plate
854	Radius Die Pin Clip
855	Die Pin
856	Radius Die Hex Pin
1079	Full Shoe Spacer
1080	Half Shoe Spacer
41040	Retainer w/Guard
41041	5" Retainer w/Guard for benders with pusher block
92100	Gauge, Hydraulic
97050	Pusher Block Spring
97233	Cap Screw for Radius Dies
99002	Tune-Up Kit (50 Assorted O-Rings, 2 Pressure Gauges, Huth Marking Pen, Tape Measure, Operator's Manual)

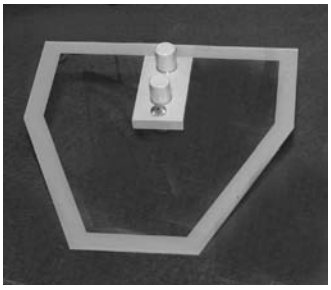

41040 Retainer w/Guard

41041 5" Retainer w/Guard for benders with pusher block

92100 Gauge, Hydraulic

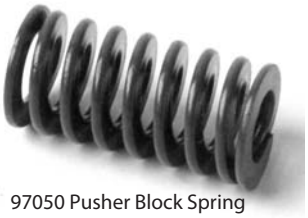

97050 Pusher Block Spring

854 Ram Die Pin Clip

856 Radius Die Hex Pin

97233 Cap Screw for Radius Dies

855 Die Pin

1079 Full Shoe Spacer

1080 Half Shoe Spacer

99002 Tune-Up Kit (50 Assorted O-Rings, 2 Pressure Gauges, Huth Marking Pen, Tape Measure, Operator's Manual)

Bending Accessories

Program Card Accessories

988 Card Cabinet

995 Program Card Tray

996 Rotation Dial

998 Card Sleeves (pkg. 1000)

No.	Description
950*	Program Card System
951*	Program Card Subscription (Paper)
981*	Program Card Subscription (Electronic Format)
952*	Program Card (blank)
980*	Program Card System in Electronic Format for IBM Computers
988	Card Cabinet
991	Rotation Dial Knob
992	Rotation Dial Face
993	Rotation Dial Lens
994	Rotation Dial Spring
995	Program Card Tray
996	Rotation Dial
998	Card Sleeves (pkg. 1000)
97091	Steel Ruler-10'
97092	Marking Pen
99006	Accessory Package

*Not Shown

97091 Steel Ruler-10'

97092 Marking Pen

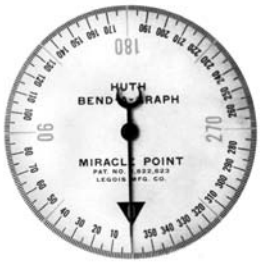

992 Rotation Dial Face

993 Rotation Dial Lens

99006 Accessory Package
Includes: 97092 Marking Pen, 97091 Steel Ruler-10', 996 Rotation Dial

994 Rotation Dial Spring

991 Rotation Dial Knob

Forming Accessories

No.	Description
815	Die Holder
816	Die Holding Pin
818	Quick Disconnect Holder
820	Non-Threaded Adapter
823	Quick Disconnect Shoulder Stud
825	Quick Disconnect Kit
1987	Auto-Flange™ Kit
1988	3" End Finishing Tool Kit
97051	Threaded Stud
97100	Knurled Nut

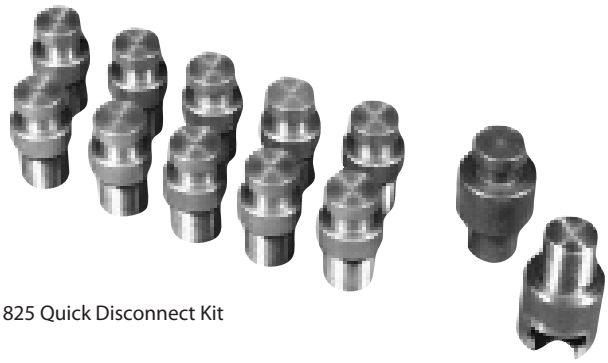

825 Quick Disconnect Kit

820 Non-Threaded Adapter

818 Quick Disconnect Holder

823 Quick Disconnect Shoulder Stud

815 Die Holder

816 Die Holding Pin

1988
3" End Finishing Tool Kit

97051 Threaded Stud

97100 Knurled Nut

1987 Auto-Flange™ Kit

Maintenance Accessories

835 Tube Cutter #30 for 3"

833 Cutter Blades #30-133

829 Cutter Blade #50

No.	Description
829	Cutter Blade #50
830	Axle for #50
833	Cutter Blades #30-133
835	Tube Cutter #30 for 3"
836	Axle #30
839	Vent Breather Cap
844	Axle Assembly #133
97301	Operator's Manual (English)
97302	Training Video
98000	Decal Kit
98042	Sizing Chart Decal (Accu-Sizer™)
98043	Calibration Decal (Accu-Sizer™)

830 Axle for #50

836 Axle #30

844 Axle Assembly #133

98000 Decal Kit

839 Vent Breather Cap

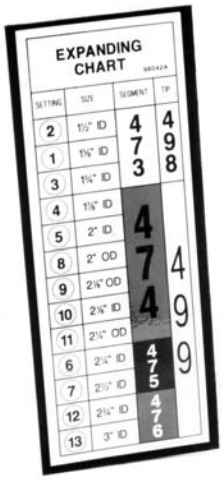

98042 Sizing Chart Decal (Accu-Sizer™)

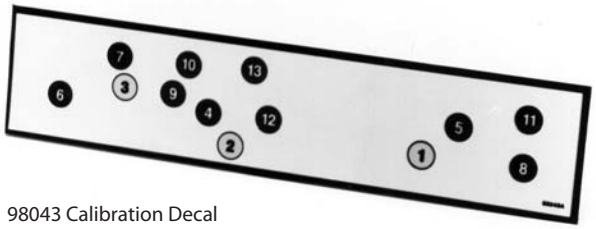

98043 Calibration Decal (Accu-Sizer™)

97301 Operator's Manual (English)

97302 Training Video

Tooling Adapters

Bring Huth Quality to your Bend-Pak®, Eze Bend® and Ben Pearson® Benders.

Now all Huth tooling (except collets) is adaptable to Bend-Pak, Eze Bend and Ben Pearson benders.
On the Bend-Pak and Eze Bend benders, all Huth arbors, segments and swage tooling will attach to the 1" 14-thread shaft without modification.
Huth back shoes and dies also mount on the swing gates without modification.
Use the Die Adapter 798 to adapt Huth bending dies to the sled of a Bend-Pak Bender. Use Die Adapter 797 to adapt Huth bending dies to the sled of an Eze Bend Bender.

Bend-Pak Bender

Die Adapter 798

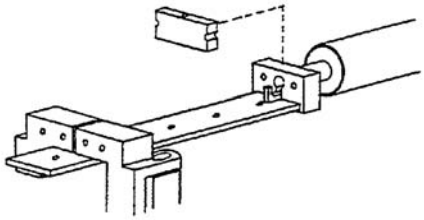

Ben Pearson Bender

Quick-Trick
Adapter (824)

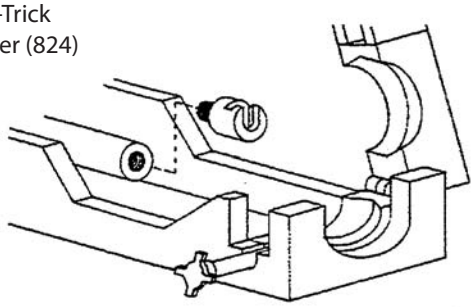

On the Ben Pearson Bender you can adapt Huth swager tooling to the swager cylinder shaft with Huth's Quick-Trick™ Adapter 824. Using Arbor Adapter 524, you can adapt Huth arbors and segments to the expander cylinder shaft and the Huth Rod Benders.

Eze Bend Bender

Die Adapter 797

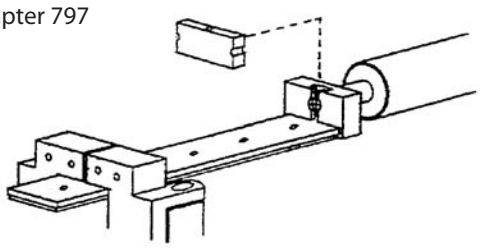

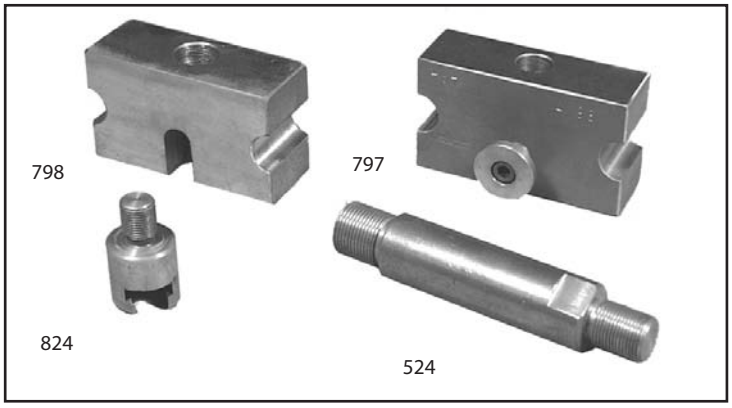

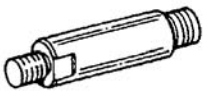

Arbor Adapter
(Part number 524)

524 Installed

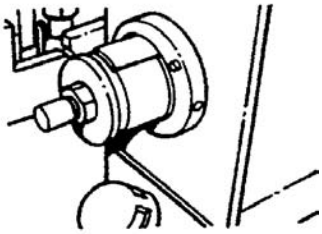

524 with Arbor

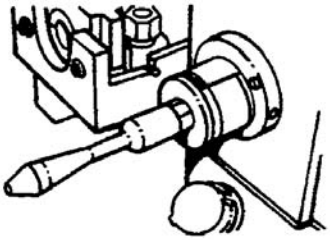

524 with Rod Bracket Bender
(Part number 985)

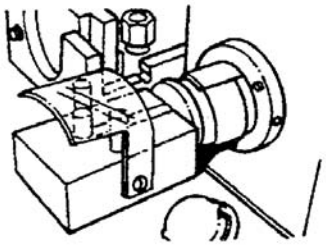

Huth's End-Finishing Upgrade Kit

for Huth Benders built before 1981

Get the most out of your pre-1981 Huth Bender with Huth's End-Finishing Upgrade Kit (part no. 1962). This kit includes a swager frame with 3½" cylinder (part no. 1960), Sure-Grip™ Collet Closer Kit (part no. 1985), Huth's Accu-Sizer™ preset expanding system upgrade (part no. 1990), and Huth's Quick Trick™ tooling change adapter kit (part no. 825).

- Speed up end-finishing
- 30% more power than pre-1981 3" cylinders
- Eliminate the need for peel plates
- End-finish closer to a bend
- Use swager and reducer dies on tubing up to 3"
- Quickly change and store tooling
- Get quick and accurate expansions
- Crush oil filters with the addition of Huth's Quick-Crush™ Oil Filter Crusher
- Bend brackets with the addition of Huth's Rod Bracket Bender

Speed up swaging/reducing

Open the clamp, position the pipe, snap the clamp closed and you're ready to go. A few seconds is all it takes.

Expanded end-finishing capabilities

With this upgrade kit you can take advantage of Huth's full line of swaging and reducing dies, including 2¾" and 3". (Additional tooling may be required.)

Accurate, easy expansions

Huth's Accu-Sizer™ preset expanding system (1990) gives you accurate, dial in bull's-eye adjustments for precise expansions each and every time.

1985

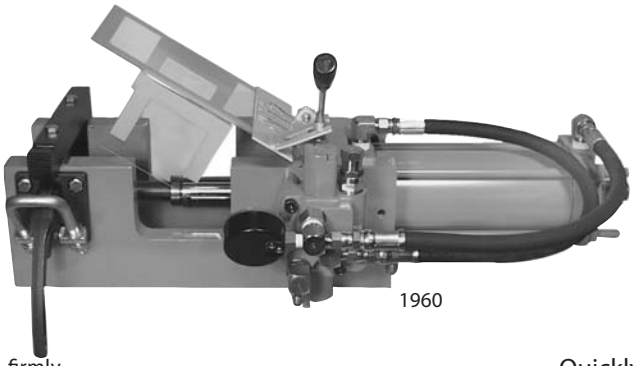

1960

1990

Close-to-a-bend end-finishing, no-slip grip

Huth's Sure-Grip™ collet closer kit, 1985, firmly holds pipes in a "no-slip" grip. Tooling retracts smoothly without the need for messy peel plates. The collets are slimmer, so you can perform end-finishing much closer to a bend than before.

Comes with one collet holder and six collets: 1-1/2", 1-3/4", 1-7/8", 2", 2-1/4", and 2-1/2".

825

Quickly switch, store tooling

The Quick-Trick™ tooling change adapter kit (825) allows you to quickly change tooling. The holder threads into the swager and the studs screw into your tooling.

This time-saver also allows you to store your dies within easy reach on Huth's Ready-Rak or Ready Rak II tool caddies.

The Quick-Trick comes with 10 threaded studs, one non-threaded adapter and one tool holder.

Huth's End-Finishing Upgrade Kit (Part no. 1962)

Huth People

Joe Becker testing a new Huth Bender.

Gregg Ulik loading a new Huth Bender for shipment.

Control For Models HB-10, 1600

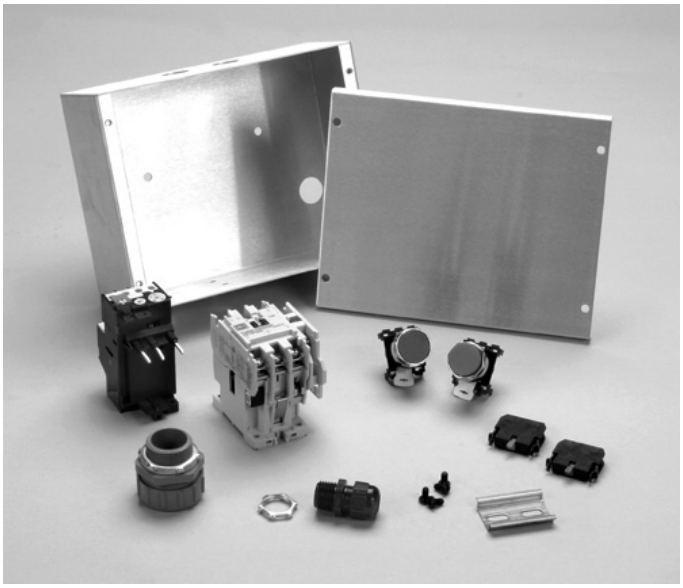

A.	95107	HB-10, 1600 Enclosure
B.	95108	Cover
C.	95512	Green Button
D.	95511	Red Button
E.	95514	Closed Contact
F.	95515	Open Contact
G.	95510	DIN Rail (Sold by the inch)
H.	97282	10-32 x 3/8 Allen Screw
I.	95449	Power Cord Grip
J.	95429	Locknut
K.	95457	Power Cord Grip
L.	95502	Contactor, Single-phase
	95519	Contactor, 3-phase
M.	95503	Overload, Single-phase
	95518	Overload, 3-phase

A.	95148	HB-10, 1600 Control, Complete, Includes cord and pedal, Single-phase.
	95149	HB-10, 1600 Control, Complete, Includes cord and pedal, 3-phase.

Huth People

Mary Rusch, Office Manager

Deb Daley, Accounting

For Model 2100

A.	95503	Single-phase Heater
	95518	3-phase Heater
B.	95530	Single-phase Starter
	95529	3-phase Starter
C.	95532	Surge Suppressor
D.	95533	Auxiliary Contact
E.	95390RB	Reconditioned Control Board
F.	95402	Transformer, 24V
G.	95403	Transformer, 12V
H.	95408	Bridge Rectifier
I.	95420	Limit Switch
J.	95413	Diode
K.	95445	Fuse
L.	95428	Encoder Connector
M.	95417	Shaft Encoder
N.	95407	2200 UF Filter Capacitor
O.	95409	Relay, 24V
P.	95410	Relay Socket

For Model 2007 (Before 6-15-90)

A.	95038	Single-phase Starter
	95036	3-phase Starter
B.	95135	Relay
C.	95096	Reset Button
D.	95097	Heater Element-509 W-58
E.	95087	Toggle Switch
F.	95083	Black Push Button
G.	95085	Red, Stop-extended Push Button
H.	95082	Green Push Button

For Models 2007, 2008, 2806

A.	95522	Limit Switch (Cutler Hammer)
B.	95509	Auxiliary Start-Stop Switch
C.	95523	Limit Switch Roller (for Cutler Hammer)
D.	95524	Limit Switch Rod Lever (for Cutler Hammer)
E.	95093	Limit Switch Roller (for Allen Bradley)
F.	95094	Limit Switch Lever Rod (for Allen Bradley)

For Models 2801, 2007 (After 6-15-90)

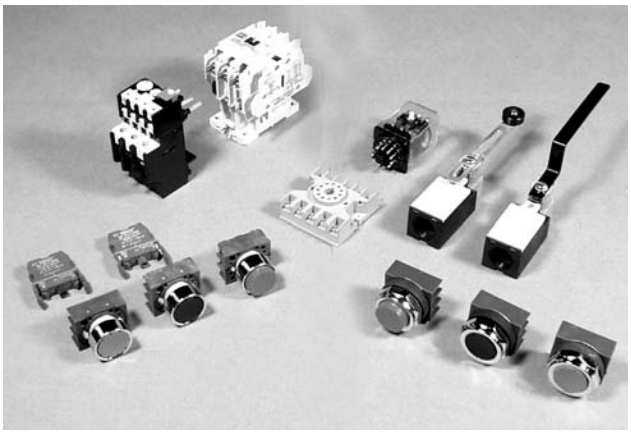

A.	95502	Single-phase Starter
	95519	3-phase Starter (not shown)
B.	95503	Single-phase Heater
	95518	3-phase Heater (not shown)
C.	95437	Rod Limit Switch (For Model 2801)
D.	95436	Roller Limit Switch (For Model 2801)
E.	95410	Relay Socket
F.	95435	Relay 230 Volts
G.	95439	Red Push Button (For Model 2801)
H.	95440	Black Push Button (For Model 2801)
I.	95438	Green Push Button (For Model 2801)
J.	95441	Contact Block Open
K.	95442	Contact Block Closed
L.	95453	Red Push Button (For Model 2007)
M.	95454	Black Push Button (For Model 2007)
N.	95452	Green Push Button (For Model 2007)
	95455	3-phase Heater 550V (not shown)

For Models 1800, 1901, 1901-S

A. 95035 Starter Enclosure
B. 95502 Single-phase Contactor
95034 3-phase Contactor
C. 95503 Single-phase Overload
95515 3-phase Overload

For Model 2010

A. 97322 Operator's Manual (2010)
B. 95115RB Reconditioned Board
C. 95112 Encoder Wheel
D. 95114 Light Sensor Assembly (new)
E. 95116 Light Sensor Assembly (earlier)
F. 95113 Light Sensor Bracket
G. 95118 Single-phase Heater
95117 3-phase Heater (not shown)

All returned parts are subject to a restocking charge

For Model 2010

95111 Conversion kit for 2010

Plugs, Cords

A. 95208 3-phase Plug, 250V, 20 Amp
B. 95203 3-phase Plug, 250V, 50 Amp
C. 95214 3-phase Plug, 30 Amp
D. 95205 3-phase Plug, 480V
E. 95209 3-phase Receptacle, 250V, 20 Amp
F. 95202 3-phase Receptacle, 250V, 50 Amp
G. 95215 3-phase Receptacle, 30 Amp
H. 95204 3-phase Receptacle, 480V (not shown)
95371 3-phase Cord, 250V (recommend length 15')(not shown)
95218 3-phase Receptacle, 415V, Export (not shown)
95219 3-phase Plug, 415V, Export (not shown)

A. 95206 Single-phase Plug, 250V
B. 95201 Single-phase Plug, 250V
C. 95207 Single-phase Receptacle, 250V
D. 95200 Single-phase Receptacle, 250V
95370 Single-phase Cord (Rec. Length 15') (not shown)
95217 Single-phase Receptacle, 250V, Export (not shown)
95216 Single-phase Plug, 250V, Export (not shown)

For Models 2008-2806 (Before 1-1-00)

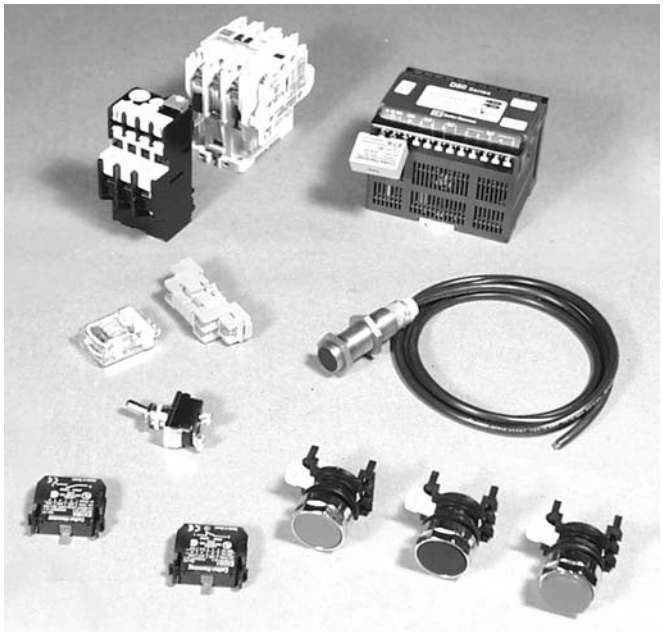

A. 95502 Single-phase Starter
   95519 3-phase Starter
B. 95503 Single-phase Heater
   95518 3-phase Heater
C. 95501 D50 Programmable Controller
D. 95504 24 Volt Relay
E. 95505 Relay Socket
F. 95506 Proximity Sensor
G. 95511 Red Push Button
H. 95512 Green Push Button
I. 95513 Black Push Button
J. 95514 Closed Contact Block
K. 95515 Open Contact Block
L. 95087 Toggle Switch

For Models 2008-2806 (After 1-1-00)

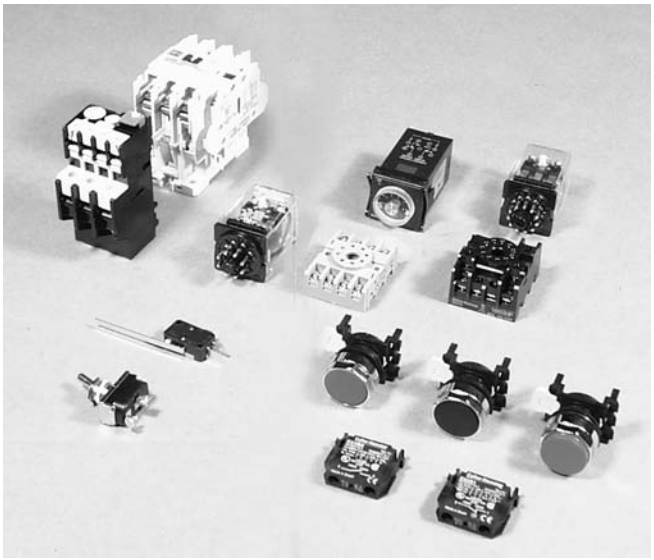

A. 95502 Single-phase Starter
   95519 3-phase Starter
B. 95503 Single-phase Heater
   95518 3-phase Heater
C. 95462 Eight Pin Relay Socket
D. 95463 Eleven Pin Relay Socket
E. 95435 Eleven Pin Relay
F. 95460 Eight Pin Relay
G. 95461 Eight Pin Timer Relay
H. 95511 Red Push Button
I. 95512 Green Push Button
J. 95513 Black Push Button
K. 95514 Closed Contact Block
L. 95515 Open Contact Block
M. 95420 Limit Switch
N. 95087 Toggle Switch

For Models 1673-1674

A. 95025 Contactor, Single Phase
   95026 Contactor, 3-phase
B. 95024 Electrical Enclosure

All returned parts are subject to a restocking charge

Foot Pedals

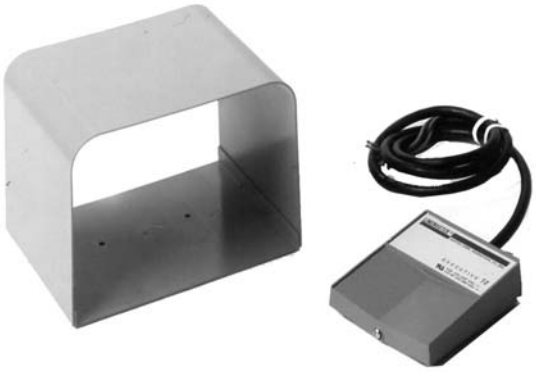

A. 95102 Foot Pedal Guard
B. 95418 Foot Pedal Switch-2100, 24V
C. 95419 Foot Pedal Switch-2007, 230V

A. 95444 Foot Pedal Option Kit, Bender Model 2801

A. 95458 Foot Pedal Kit, Model 1600, HB-10

All returned parts are subject to a restocking charge

Knee Pedal

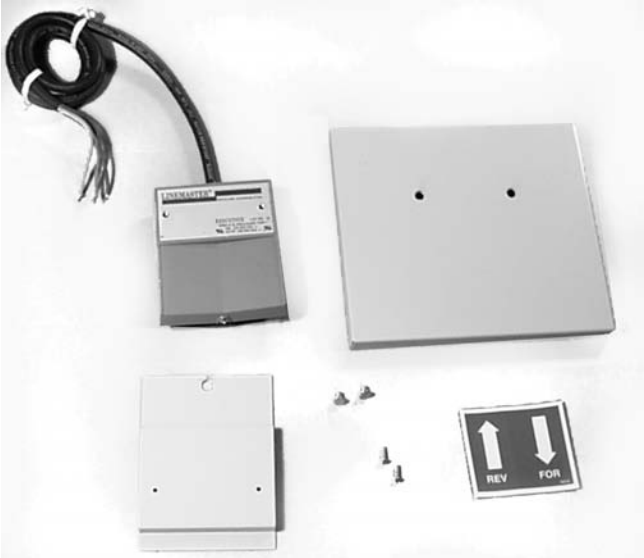

A.	97447	Knee Pedal Mount, 2008-2806
	97469	Knee Pedal Mount, HB-10 - 1600
B.	97448	Knee Pedal Pad
C.	98036	Direction Label
D.	95419DT	Knee Pedal Switch
E.	97244	Screw, 12-24 x 3/8
F.	97283	Screw, 6-32 x 1/2

Auto-Manual Bending (Older Models)

95081 Three-Way Selector Switch

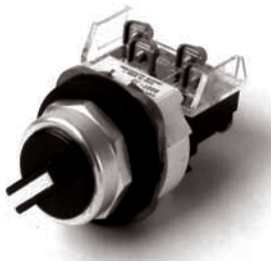

A. 95015 Motor, Baldor, 5-HP, Single-phase
95011 Motor, Baldor, 7-1/2-HP, Single-phase (not shown)
95019 Motor, HB-10, 1600 5-HP Single-phase (not shown)
95007 Motor, Baldor, 3-HP, Single Phase (not shown)

B. 95016 Motor, Baldor, 5-HP, 3-phase
95012 Motor, Baldor, 5 HP, 550V 3-phase (Not Shown)
95020 Motor, HB-10, 1600 5-HP 3-phase (not shown)
95010 Motor, Baldor 7-1/2-HP, 3-phase (not shown)

A. 92116 Hydraulic Pump (for 5HP motor)
92117 Hydraulic Pump (for 7½HP motor) (not shown)

A. 92114 Hydraulic Pump, HB-10, 1600
B. 95021 Motor/Pump Mount, HB-10, 1600

All returned parts are subject to a restocking charge

A. 92361 Coupler with SpyderBorg-warner Sunstrand Pump 5/8" x 1-1/8" Shaft (Replaced by 92357)
92360 Coupling, Throne For HB-10, 1600 1/2"x 1-1/8" (not shown) (Replaced by 92356)
92362 Coupling, Tektro 3/4" x 1-1/8" (not shown)

B. 92363 Rubber Spyder (replacement for 92360, 92361, 92362 Couplings)

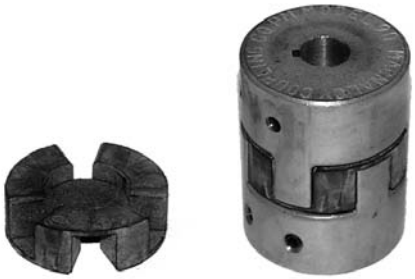

A. 92358 Rubber Spyder for 92357, 92356
B. 92357 Coupler with Spyder-5/8" x 1-1/8" Motor Shaft (Replaces 92361)
92356 Coupler with spyder 1/2" x 1-1/8" Motor Shaft

A. 92340 Rubber Spyder-Newman Motor
B. 92341 Coupler with Spyder-Newman Motor, .625 to .875

A. 92045 Easy Flow Filter

A. 92292 Filter Gauge
B. 92290 Filter
92289 Filter Assy. Complete

All returned parts are subject to a restocking charge

A. 92121 Adaptor Plate for 92054 Valves
B. 92168 24V, Directional Valve (models 2100, 2010)
C. 92164 220V, DO3 Directional Valve

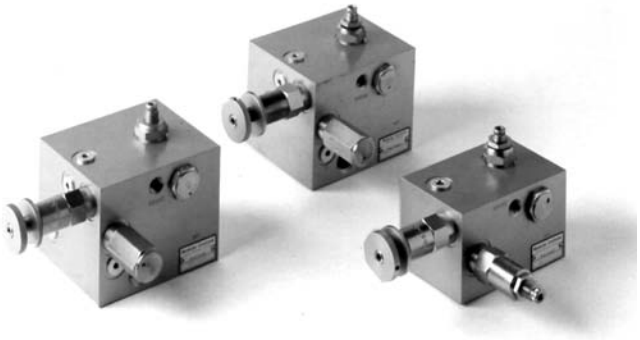

A. 92165 Sequence Valve DO3 (for Bender Models 2100, 2007, 2801, 2008, 2806)
B. 92054 Sequence Valve DO2 (for Bender Models 2100, 2010, 2007, 2801)
C. 92051 Sequence Valve (for Bender Models 1800, 1901,1901-S and older models with the directional valve mounted separately)
92111 Sequence Valve Knob (not shown)

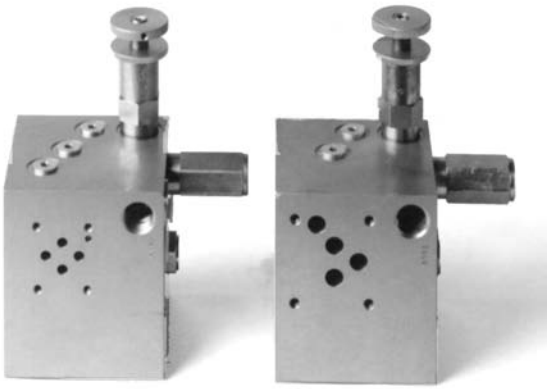

A. 92165 Bottom View of Sequence Valve DO3 Showing Hole Pattern
B. 92054 Bottom View of Sequence Valve DO2 Showing Hole Pattern

92105 Valve for Swager with fittings (shown)
92103 Valve for Swager w/o fittings
92103P Valve for 1673

92101 Valve for Bending Control - 1800, 1900 Bender Series

92112 Valve for 1674 (includes handles, nuts and lockwashers)

92382 Main Cylinder, 6" (Special Applications Only)

92172 Main Cylinder, HB-10, 1600 (not shown)
92174 DE Cylinder, HB-10, 1600 (not shown)
92173 Side Cylinder, HB-10, 1600 (not shown)

All returned parts are subject to a restocking charge

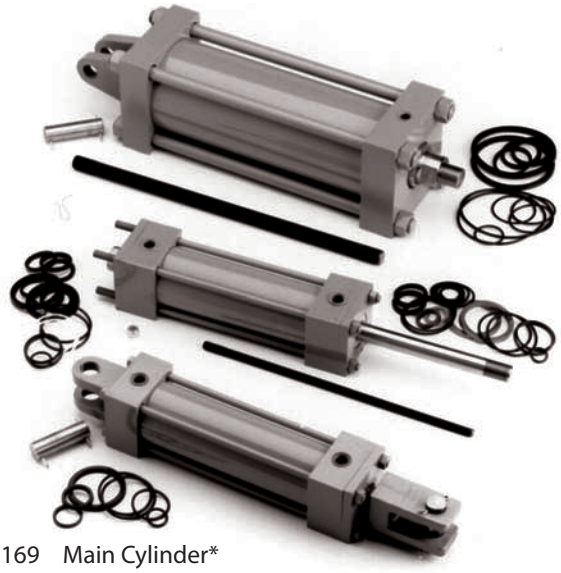

A. 92169 Main Cylinder*
92048 Gland for Main Cylinder
B. 92161 Tie Rod, Main Cylinder
C. 92203 Top Cylinder Pin
D. 92235 O-Ring Seal Kit for Main Cylinder
E. 92355 DE Cylinder, 3"*
F. 92205 O-Ring Seal Kit for 92355
92204 Gland for Double End Cylinder, 1" Shaft
92201 Gland for Double End Cylinder, 1½" Shaft
G. 92160 Tie Rod, DE or Side Cylinder
H. 97330 Nut for 92355
I. 92231 O-Ring Seal Kit for DE Cylinder - 1½" shaft on both ends
J. 92150 Side Cylinder*
K. 92236 O-Ring Seal Kit for 92150
92229 Gland, Side Cylinder
L. 92202 Side Cylinder Pin
*Industrial

A. 92158 Agricultural Main Cylinder, 5" x 14"
B. 92208 Seal Kit for 92158*
C. 92159 Agricultural Side Cylinder, 3" x 8"
D. 92207 Seal Kit for 92159*
E. 92256 Agricultural DE Cylinder, 3-1/2" x 7"
F. 92209 Seal Kit for 92256*
G. 97208 Jam Nut 1/2"-13
H. 97383 Lock Washer 1/2"
*(For benders built after 3/1/91)

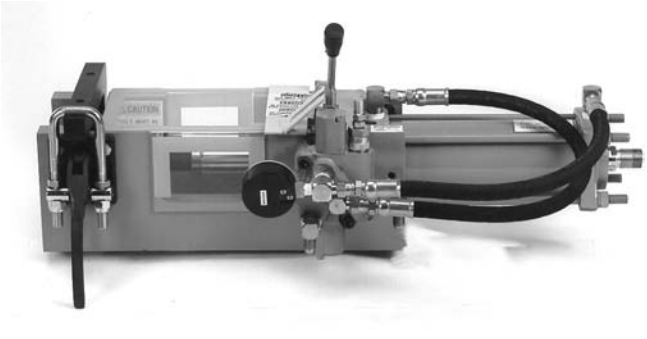

A. 1960 Swager Frame with Hydraulics; 3-1/2" Cylinder

A. 1959 Swager Frame w/o Hydraulics, for 3" Cylinder
1961 Swager Frame w/o Hydraulics, for 3-1/2" Cylinder (not shown)

A. Model 1985 Collet Closer Kit (1-1/2" - 2-1/2")

A. 92109 Handle for Swager Valve 92103, 92112
B. 41032 Link Handle Ball Swager Guard
C. 92115 Valve Control Handle
D. 92047 Chain Link Kit (goes with either handle 41032 or 92115)

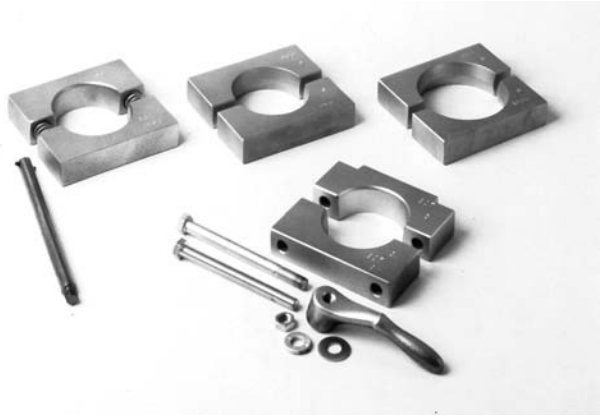

A. 808 Long Handle-9"
B. 884 Collet Holder (Uses 200 Series Collets)
C. 890 Collet Holder (Uses 700 Series Collets)
D. 891 Collet Holder (After 2-85-Uses 1700 Series Collets)
E. 807 Collet Holder (Uses 200 Series Collets)
F. 809 Bolt, 6"
G. 810 Bolt, 5-1/2"
H. 804 Handle
I. 812 Nut
J. 811 Washer
K 813 Washer, Brass
817 Handle, 12"*
892 Collet Holder, 2-3/4", 3" (For 1729 and 1730 Collets)

*Not shown

A. 97176 Collet Closer Clamp
B. 97267 Bolt 3/8"-16 x 1 (qty. 4)
C. 91061 Collet Hinge Block (qty. 2)
D. 91060 Collet Closer Arm
E. 97232 Bolt for 91060, 1/2-13 x 4
F. 97208 Nut-1/2-13
G. 97231 Bolt 3/8-16 x 1-3/4 (qty. 6)

A. 41047 Adjustable Collar Assembly-Accu-Sizer for 3-1/2" Cylinder
41046 Same as A for 3" cylinder (Not Shown)
513 Snap Ring Nut for 41046
514 Snap Ring for 41046

A. 522 Adjustable Collar for 1" through 3-1/2" Expansions (Replacement Collar for 41046, 41047)
B. 512 Adjustable Collar for 2-3/4" through 5-1/2" Expansions for 3" Cylinder
523 Adjustable Collar for 2-3/4" through 5-1/2" Expansions for 3-1/2" Cylinder (not shown)
C 527 Adjustable Collar Assembly, 5" Cylinder, H-1674
D. 528 Extension, 527 Adjustable Collar

A. 91047 Guide Plate
B. 91033 Sled for Bender

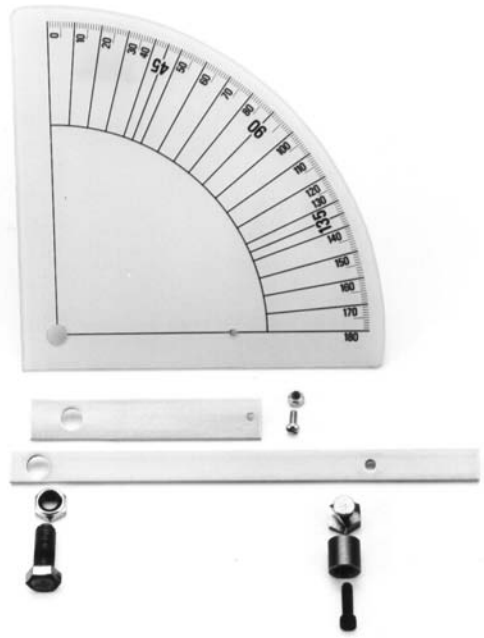

A. 91160 Depth-of-Bend Plate
B. 91151 Depth-of-Bend Support
C. 97222 Lock Nut 1/2"-13
D. 91152 Handle
E. 97211 Bolt 1/2" - 13 x 1-1/2"
F. 91150 Pointer (Brass)
G. 97000 Cam
H. 97226 Cap Screw 1/4" - 20 x 7/8"

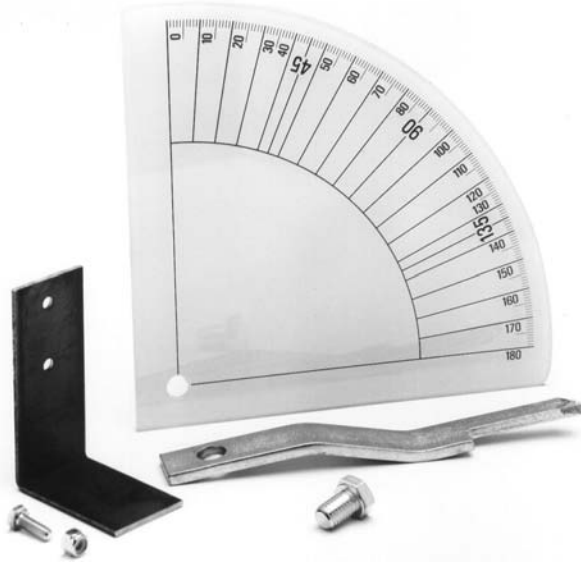

A. 91153 Pointer (Metal)
B. 97400 Bolt 1/2" - 13 x 3/4"
C. 91160 Depth-of-Bend Plate
D. 97260 Bolt 1/4"-20 x 3/4" (2 Required)
E. 97210 Lock Nut 1/4" -20 (2 Required)
F. 91027 Depth-of-Bend Bracket

A. 91034 Left Gate
B. 91042 Gate Pin
C. 91035 Right Gate
D. 90093 Inside Snap Ring
E. 90094 Outside Snap Ring
F. 91050 Head Block Bushing
G. 90092 Keyway, 5/16" x 5/16"
H. 91052 Gate Bushing

A. 97378 Foot Control Bracket
B. 97380 Foot Control Pedal
C. 97379 Connecting Rod
D. 97381 Complete Kit (All for 1901-S)

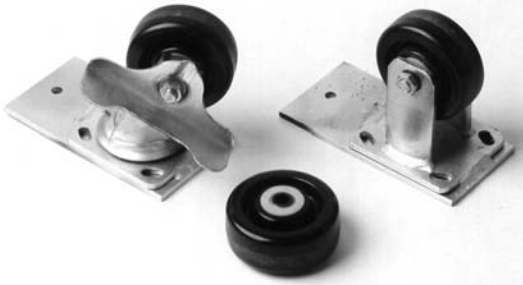

A. 97061 Caster, Swivel, with Brake
B. 97062 Caster, Rigid
C. 97060 Phenolic Wheel

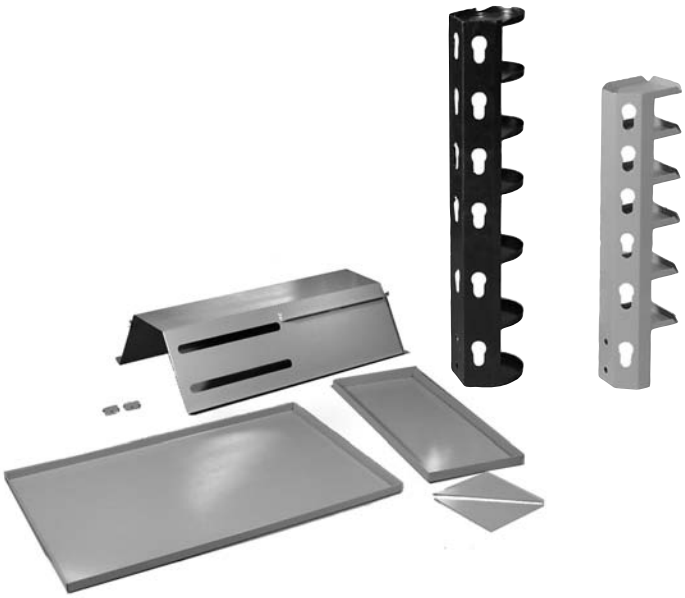

A. 91096 Deluxe Tool Tray
B. 91092 Bracket for 91096 (2 Required)
C. 91025 Flat Tool Tray
D. 91075 Swager Tray
E. 91076 Support for Tray 91075 (2 Required)
91078 Swager Tray Assy. Complete (includes D and E)
F. 91166 Ready-Rak™
G. 91176 Ready-Rak II™

41050 Safety Guard Kit Complete for 3" Cylinder (Includes components shown above)
41051 Safety Guard Kit Complete for 3-1/2" Cylinder (Includes components shown above)
A. 41042 Expander Guard for 3" Cylinder
41045 Expander Guard for 3-1/2" Cylinder (not shown)
B. 41043 Swager Box Guard Assembly (Includes handle 41032)
C. 41040 Die Guard w/ Die Retainer
D. 41020 Swage Box Hinge Bracket
E. 41044 Gate Guard w/Rivets
F. 41041 Die Guard w/Die Retainer for 5" Radius

986 Muffler Stand Replacement Parts

Key	Part No.	Description
1.	97466	Top Assembly
2.	97422	Casting
3.	97429	Spring, Catch
4.	97427	Catch
5.	98072	Decal, Exhaust Work Only
6.	98073	Decal, Maximum 70 lbs.
7.	97467	Base Assembly
8.	97430	Washer, Rubber
9.	97246	1/4" Nut
10.	97426	1/4" x 1/2" Bolt, Stove

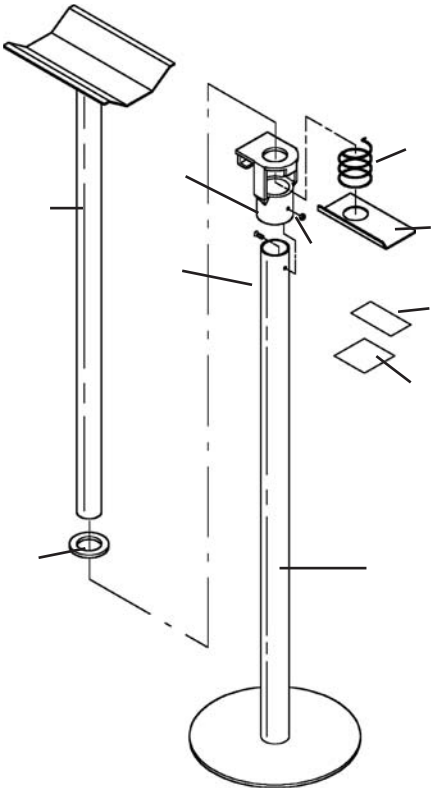

985 Rod Bracket Bender Replacement Parts

Key	Part No.	Description
1.	97432	Arbor
2.	97433	Pin
3.	97431	Block
4.	97434	Guard, Vinyl
	98071	Label, Pinch Point (Not Shown)
5.	515	Set Screw, 1/4" NC x 5/8"
6.	97395	Washer, Flat, 1/4"
7.	97393	Machine Screw, 1/4" NC x 5/8"

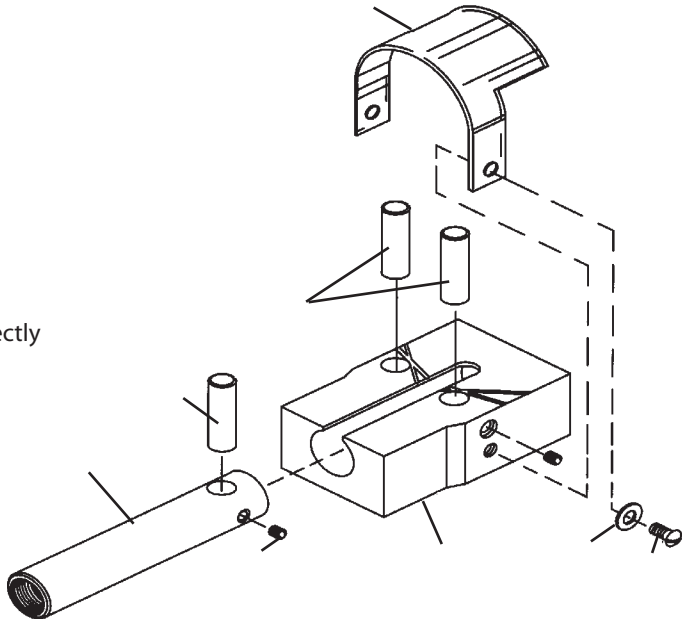

Material for Rod Bender

The following lengths of rod material can be ordered directly from your exhaust distributor:

Part No.	Dia.	Length
F2372	7/16"Round	14" (20 pcs.)
F2373	1/2" Round	14" (20 pcs.)
F2374	1-1/4" Flat	14" (20 pcs.)

Model 6020 Quick•Crush™ Replacement Parts

KEY	PART NO.	DESCRIPTION
1.	91127	Crusher Door Assembly
2.	91129	Ram Plate Assembly
3.	823	Quick Disconnect Threaded Shoulder Stud
4.	97465	Locking Pin
5.	98078	Decal, Quick•Crush
6.	97464	Hinge Pin
7.	91128	Crusher Body
8.	6021	Drain Cart
9.	97468	Spigot

Note: Drain parts not serviceable

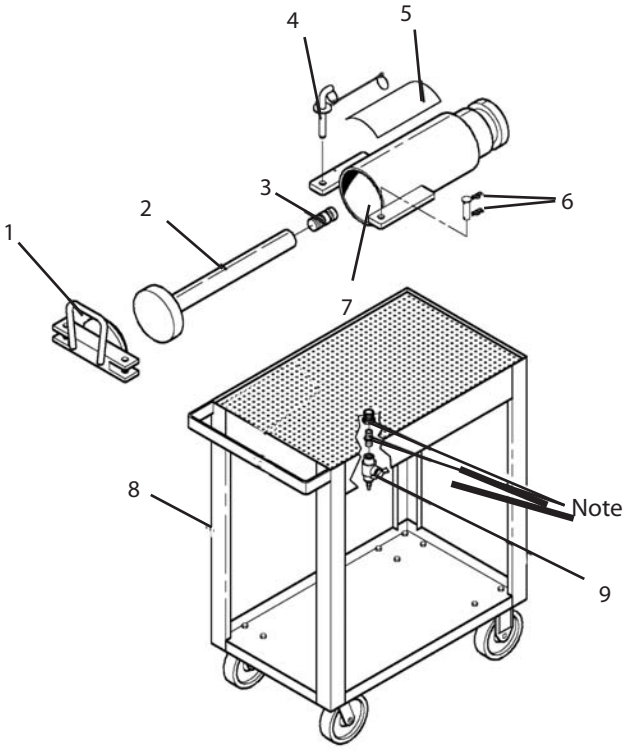

Huth Oil Filter Crusher Model HFC6007 Automotive and Light Truck Replacement Parts

KEY	PART NO.	DESCRIPTION
1.	92152	8 x 7 Air Cylinder
2.	92367	Air Directional Valve
3.	92381	Air Switch
4.	92369	Air Silencer
5.	92370	Air Muffler
6.	92372	Exhaust Valve
7.	97406	Catch
8.	97407	Chrome Handle
9.	92374	Check Valve
10.	92162	Regulator
	92371	Fitting Kit (13 pcs.)

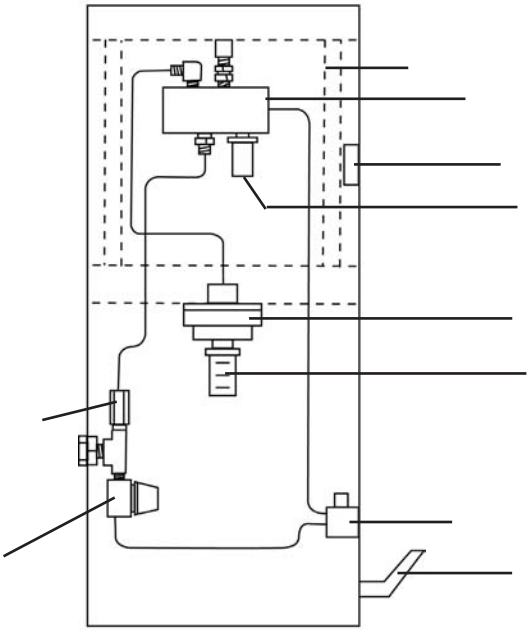

Model 1680 Mighty Mate II Replacement Parts

KEY	PART NO.	DESCRIPTION
1.	97001	Housing
2.	97064	Caster Assembly Rigid
3.	97065	Caster Assembly Swivel
4.	95191	Male Plug Power Cord
5.	95192	Cord 10' Max. (sold per ft.)
6.	95197	Electrical Power Cord Grip
7.	95426	Relay
8.		Quick Disconnect Elec. Plug Assembly
	A. 95393	Receptacle
	B. 95394	Plug
	C. 95395	Cable Clamp
	D. 95396	Pins
	E. 95397	Sockets
9.	92364	Quick Disconnect Hydraulic Assembly
10.	92261	Pump to Quick Disconnect Hose
11.	92004	Str. Ftg., 1/2" ML NPT x 3/8" ML JIC
12.	1611	Power Unit
13.	92365	Filter Element
14.	475	Expanding Segment (Black) 2-1/8" - 2-1/2"
15.	474	Expanding Segment (Red) 1-3/4" - 2-1/8"
16.	473	Expanding Segment (Yellow) 1-1/2" - 1-3/4"
17.	498	Arbor Tip Small, 1½" - 1¾"
18.	98025	Sizing Decal
19.	92156	Cylinder Body Assembly
	92167	Seal Kit for 92156
20.	595	Selector Position Sight
21.	98024	Calibration Decal
22.	497	Arbor, 1½" - 3½"
23.	499	Arbor Tip (Large 1¾"- 3½")
24.	97177	Pistol Grip Handle
25.	95177	Trigger Switch
26.	92296	Hydraulic Hose Assembly

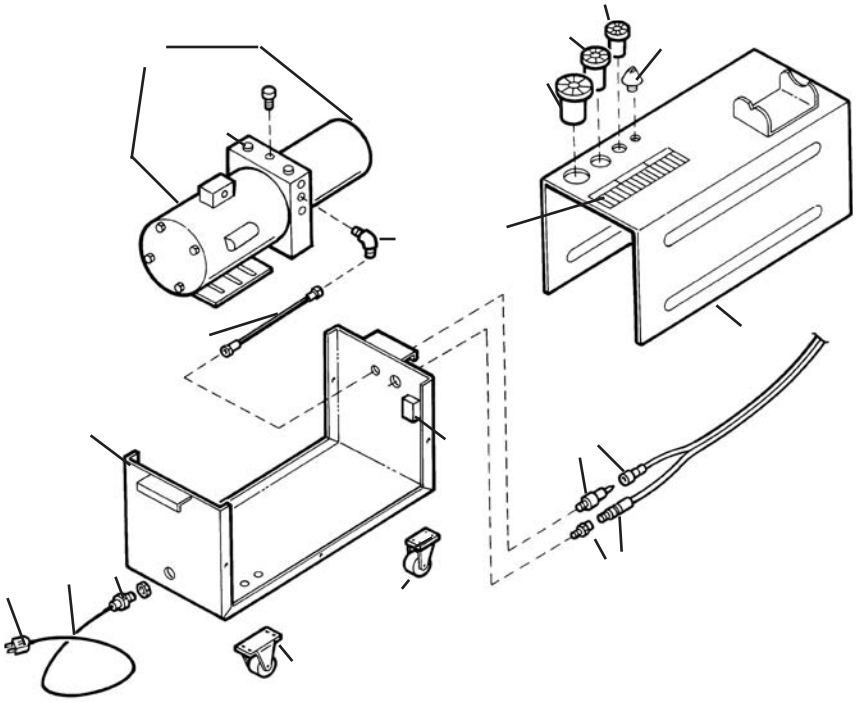

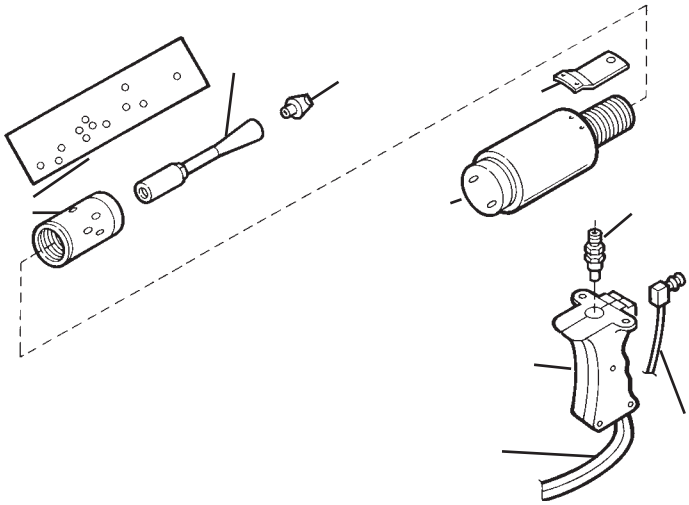

P/N 1681 Hose Assembly

Includes Keys:

8A.	95394	Plug
8B.	95395	Cable Clamp
8C.	95396	Pins
	95398	Wire
9.	92364	Quick Disconnect Hydraulic Assembly
25.	95177	Trigger Switch
26.	92296	Hydraulic Hose Assembly

P/N 1682 Gun-Hose Assembly

Includes Keys:

19.	92156	Cylinder Body Assembly
20.	595	Selector Position Sight
21.	98024	Calibration Decal
24.	97177	Pistol Grip Handle
	1681	Hose Assembly Kit

Model 1685 Mitey Mate Jr. Replacement Parts

KEY	PART NO.	DESCRIPTION
1.	98024	Calibration Decal
2.	497	Arbor, 1-1/2" - 3-1/2"
3.	499	Tip, Large 1-3/4" - 3-1/2"
	498	Tip, Small 1-1/2" - 1-3/4"
4.	595	Selector Position Sight
5.	92156	Cylinder (Complete)
	92167	Seal Kit for 92156
6.	97177	Pistol Grip Handle
7.	92258	Hose Assembly, Single Line
8.	1612	Air/Oil Pump
9.	92072	3/8 NPT x 1/4 NPT Hex Nipple
10.	92364	Quick Disconnect Coupling
11.	97264	1/4" Pipe Nipple
12.	92162	Air Regulator
13.	92163	1/8" Pipe Plug
	475	Segment(Black) 2-1/8" - 2-1/2"
	474	Segment (Red) 1-3/4" - 2-1/8"
	473	Segment (Yellow) 1-1/2" - 1-3/4"

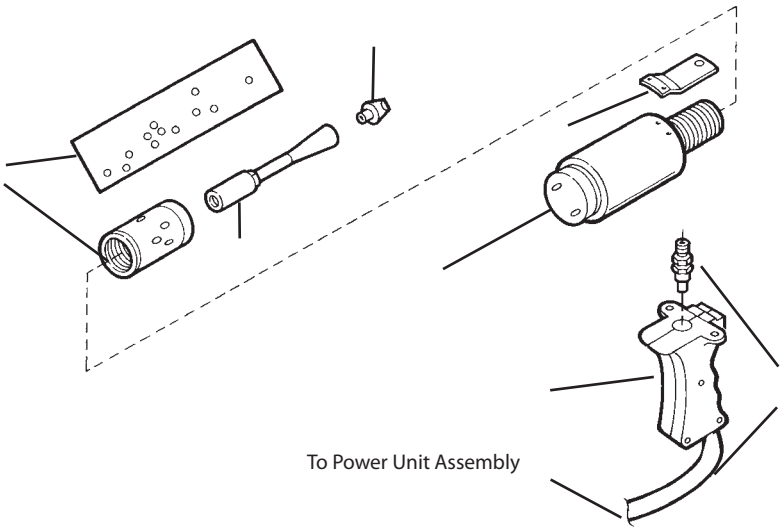

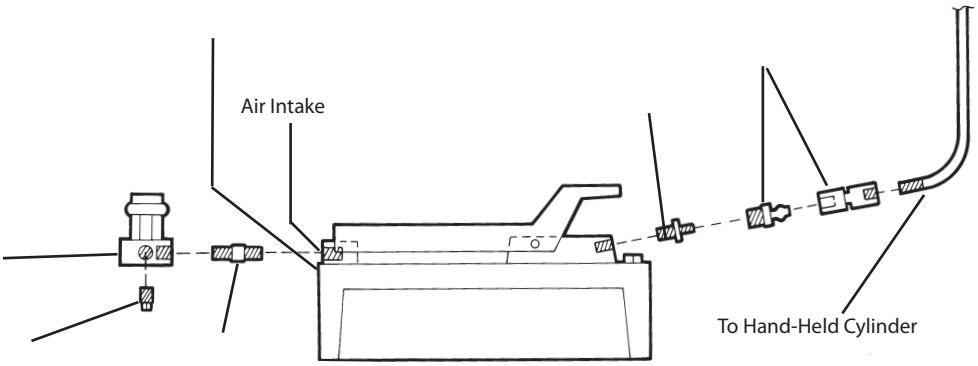

Model 1686 Gun-Hose Assembly

Includes Keys:

1.	98024	Calibration Decal
4.	595	Selector Position Sight
5.	92156	Cylinder (Complete)
6.	97177	Pistol Grip Handle
7.	92258	Hose Assembly
10.	92364	Quick Disconnect Coupling

Models 1690 and 1691 Expanders Replacement Parts

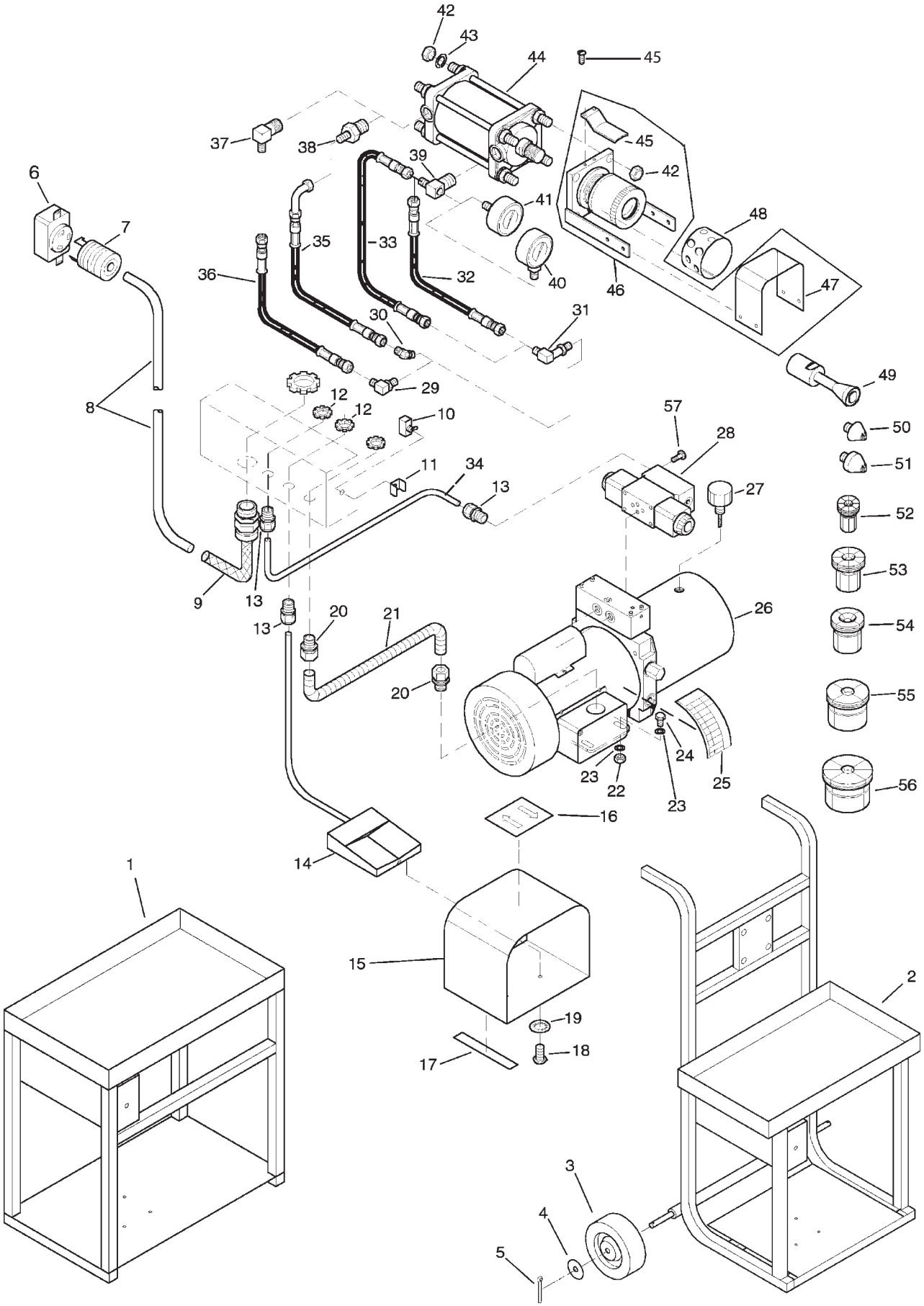

Models 1690 and 1691 Expanders Replacement Parts

KEY	PART NO.	DESCRIPTION
1	97010	Benchtop Frame Model 1690
2	97011	Cart Frame Model 1691
3	97059	Wheel
4	97333	$^1/_2$" Flat Washer
5	97334	$^1/_2$" x 2" Cotter Pin
6	95190	Receptacle - 110V, 30A
	95188	Receptacle - 220V, 20A
7	95189	Plug - 110V, 30A
	95187	Plug - 220V, 20A
8	95370	10-3 Cord - Sold by the foot. 10' - 1690; 15' - 1691
9	95172	Kellum
10	95087	Toggle Switch
11	95091	Toggle Switch Cover
12	95429	Lock Nut
13	95449	Cord Grip
14	95419	Foot Pedal
15	95102	Foot Pedal Guard
16	98036	Direction Label
17	50058	Rubber Foot
18	97283	6 - 32 x $^1/_2$" Screw
19	97285	6 - 32 Star Washer
20	95229	$^1/_2$" Straight Conduit Connector
21	95230	$^1/_2$" x 8" Conduit
22	97210	$^1/_4$" - 20 Locknut
23	97395	$^1/_4$" Flat Washer
24	97260	$^1/_4$" - 20 x $^3/_4$" Hex Bolt
25	98042	Sizing Chart
26	1617	Power Unit
27	838	Breather Cap
28	92171	Directional Valve, 110V
	92164	Directional Valve, 220V
29	92071	90° O-Ring Fitting, $^3/_8$" St. Thread x $^3/_8$" JIC Model 1691
30	92066	45° O-Ring Fitting, $^3/_8$" St. Thread x $^3/_8$" JIC Model 1690
31	92065	90° O-Ring Fitting, $^3/_8$" St. Thread x $^3/_8$" JIC Extra Long
32	92265	$^1/_4$" 2-Wire, 5,000 PSI $^3/_8$" Female Swivel Hose 16" Long Model 1690
33	92271	$^1/_4$" 2-Wire, 5,000 PSI $^3/_8$" Female Swivel Hose 30" Long Model 1691
34	95508	16-3 Cord, 30" (Sold by the inch)
35	92298	$^1/_4$" 2-Wire, 5,000 PSI $^3/_8$" Female Swivel- $^3/_8$" Female 90° Swivel Hose, 13", Model 1690
36	92270	$^1/_4$" 2-Wire, 5,000 PSI $^3/_8$" Female Swivel Hose 24" Long Model 1691
37	92009	90 Ftg, 1/2ML NPT x 3/8ML JIC Model 1691
38	92002	Str. Ftg., $^1/_2$" ML NPT x $^3/_8$" ML JIC Model 1690
39	92009DT	90 Ftg, 1/2ML NPT x 3/8ML JIC, DT
40	92100	Pressure Gauge, Model 1691
41	92099	Pressure Gauge, Model 1690
42	97208	$^1/_2$" - 13 Jam Nut
43	97383	$^1/_2$" Lock Washer
44	92375	3-$^1/_2$" x 3" Expanding Cylinder
45	595	Sight
46	41047	Adjustable Collar (Includes sight and guard, but not decal)
47	41010	Guard Material
48	98043	Calibration Decal
49	508	Arbor, 1-1/2" - 3-1/2"
50	498	Small Arbor Tip, 1-1/2" - 1-3/4"
51	499	Large Arbor Tip, 1-3/4" - 3-1/2"
52	473	Segment Set (Yellow) 1-1/2" - 1-3/4"
53	474	Segment Set (Red) 1-3/4" - 2-1/8"
54	475	Segment Set (Black) 2-1/8" - 2-1/2"
55	476	Segment Set (Green) 2-1/2" - 3"
56	477	Segment Set, 3" - 3-1/2"
57	97268	10 - 24 x 1$^1/_4$" Allen Head Cap Screw

Frame And Hydraulic Components - 1673

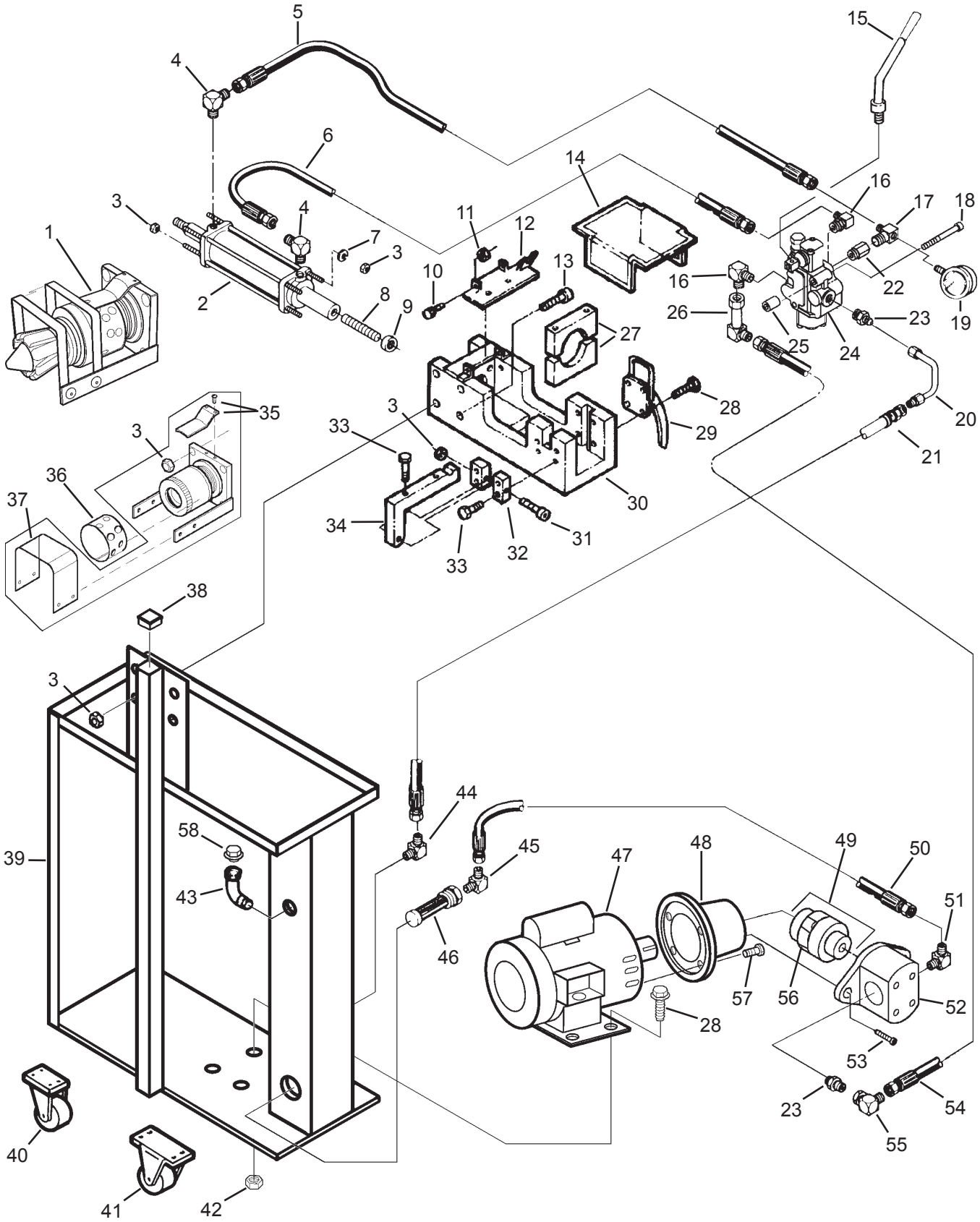

Frame And Hydraulic Components - 1673

KEY	PART NO.	DESCRIPTION	QUANTITY	
1	41047	Adjustable Collar and Guard Assembly (includes #3, #35, and #37)	1	
2	92256	Swager Cylinder 3-1/2"		1
3	97208	Jam Nut, 1/2"-13		5
4	92009	90 Ftg, 1/2ML NPT x 3/8ML JIC		2
5	92263	Hose, 3/8" Double Braid 5000 psi. 19" Long		1
6	92264	Hose, 3/8" Double Braid 5000 psi. 23-1/2" Long	1	
7	97383	Lockwasher, 1/2"		4
8	97051	Stud, Threaded 1-14		1
9	97100	Nut, Knurled		1
10	97260	Hex Bolt, 1/4"-20x3/4"		1
11	97210	Locknut, 1/4"-20		1
12		Guard Assemble, Swager Box (Order 1 each 41019 and 41017, Assembled at factory)		
13	97217	Screw, Socket Head Cap, 1/2"-13x1-1/2"		4
14	41011	Swager Box Cover Material		1
15	92109	Handle, Swage Valve		1
16	92004	Str. Ftg., $^1/_2$" ML NPT x $^3/_8$" ML JIC	2	
17	92009DT	90 Ftg, 1/2ML NPT x 3/8ML JIC, DT		1
18	97206	Screw, Socket Head Cap, 3/8"-16x3-1/4"		2
19	92100	Pressure Gauge		1
20	92313	Tube Assembly, 3/8"		1
21	92248	Hose, 3/8" Low Pressure Return 36-1/2" Long	1	
22	92008	Str Ftg, 1/2ML SAE O'R x 1/2 FM NPT	1	
23	92006	Str, 3/8ML JIC x 1/2ML SAE O'R		2
24	92103P	Swage Valve with Handle - Plugged		1
25	70045	Bushing, Steel		2
26	92023	90 Lg Elb, 3/8 ML JIC x 3/8FM JIC		1
27	891	Collet Holder		1
28	97267	Hex Bolt, 3/8"-16 x 1"		8
29	97176	Clamp, Swager Arm		1
30	34012	Frame, Swager		1
31	97232	Hex Bolt, 1/2"-13x4"		1
32	91061	Hinge Block		2
33	97231	Hex Bolt, 3/8"-16x1-3/4"		2
34	91060	Swager Arm		1
35	595	Sight		1
36	98043	Calibration Decal		1
37	41010	Guard Material		1
38	97472	End Cap		1
39		Frame		1
40	97072	Swivel Caster		2
41	97073	Rigid Caster		2
42	97225	Locknut, 3/8"-16		4
43	92042	Fitting, Elbow, 45 Degree		1
44	92020	Fitting, Elbow, 90 Degree		1
45	92010	90 Ftg, 1/2M NPT x 1/2ML JIC		1
46	92045	Filter, Easy Flow		1
47	95019	Motor, 5 H.P., 60 Hz, Single Phase		1
	95020	Motor, 5 H.P., 60 Hz, Three Phase		1
48	95021	Mount, Motor-Pump		1
49	92356	Coupler, with Spyder		1
50	92246	Hose, 1/2" Suction 29"		1
51	92078	Fitting, Elbow, 90 Degree		1
52	92114	Pump		1
53	97267	Hex Bolt, 3/8"-16 x 1"		2
54	92247	Hose, 3/8" Double Braid 5000 psi. 36-1/2"		1
55	92021	90 Elb, 3/8ML JIC x 3/8FM JIC SVL		1
56	92358	Spyder		1
57	97400	Hex Bolt, 1/2"-13x3/4"		4
58	839	Vent Cap		1

Frame And Hydraulic Components - 1674

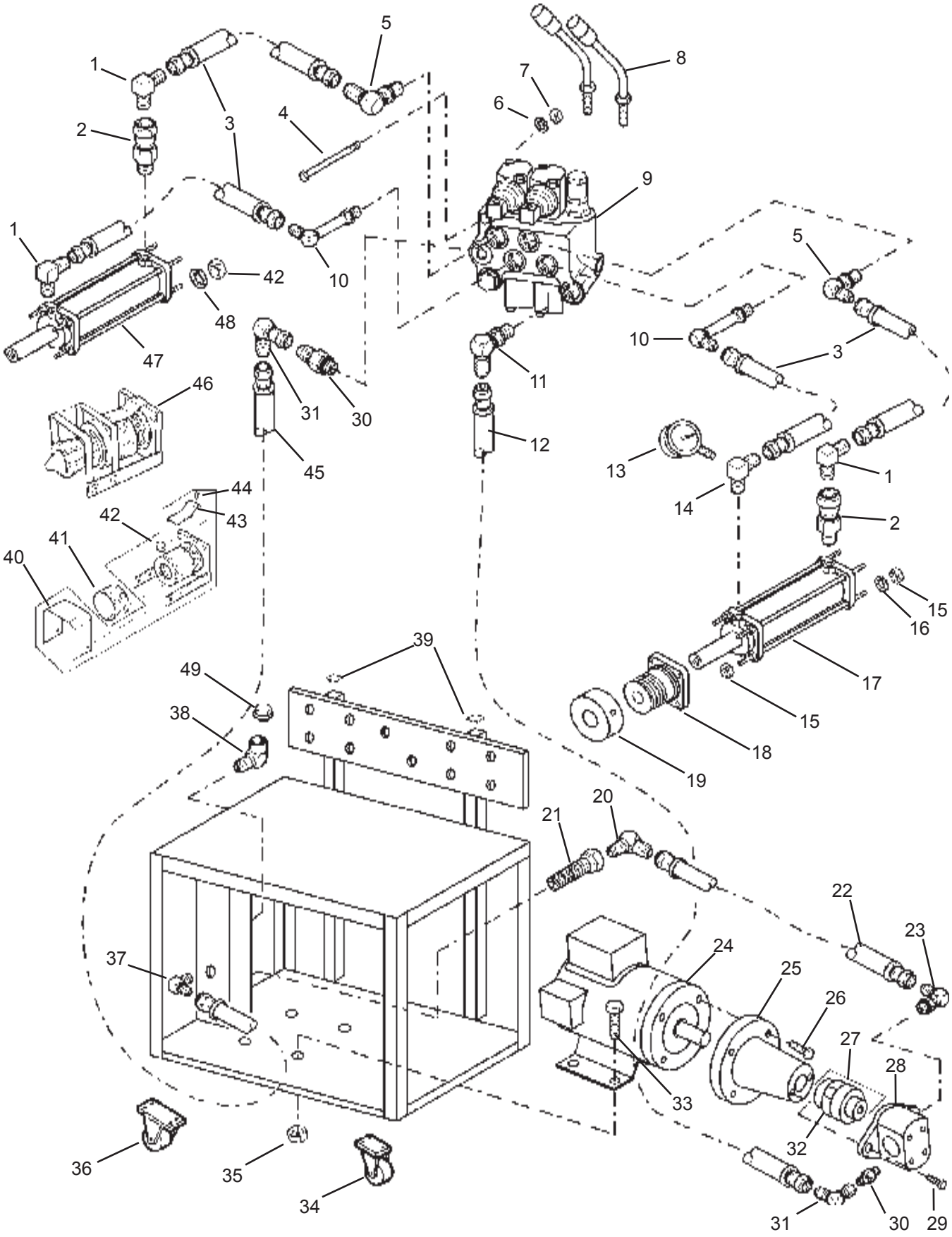

Frame And Hydraulic Components - 1674

REF.	PART NO.	DESCRIPTION	QUANTITY
1	92009	90 Ftg, 1/2ML NPT x 3/8ML JIC	3
2	92079	Fitting, Straight Swivel	2
3	92263	Hose, 3/8" Double Braid 5000 psi. 19" Long	4
4	97294	Hex Bolt, 5/16"-18x2-1/2"	2
5	92071	Fitting, Elbow, 90 Degree O-Ring	2
6	97296	Lockwasher, 5/16"	2
7	97295	Jam Nut, 5/16"-18	2
8	92109	Handle, Swage Valve	2
9	92112	Swage Valve, 2 Section with Handles	1
10	92065	Fitting, Elbow, 90 Degree O-Ring (long)	2
11	92004	Str. Ftg., $^1/_2$" ML NPT x $^3/_8$" ML JIC	1
12	92273	Hose, 3/8" Double Braid 5000 psi. 41" Long	1
13	92100	Pressure Gauge	1
14	92009DT	90 Ftg, 1/2ML NPT x 3/8ML JIC, DT	1
15	97292	Jam Nut, 3/4"	6
16	97293	Lockwasher, 3/4"	4
17	92389	Cylinder 5"	1
18	527	Adjustable Collar, 2-7/8"I.D. - 6"I.D.	1
19	528	Adjustable Collar Extension (for 527)	1
20	92010	90 Ftg, 1/2ML NPT x 3/8ML JIC	1
21	92045	Filter, Easy Flow	1
22	92246	Hose, 1/2" Suction 29" Long	1
23	92078	Fitting, Elbow, 90 Degree O-Ring	1
24	95019	Motor, 5 H.P., 60 Hz, Single-phase	1
	95020	Motor, 5 H.P., 60 Hz, 3-phase	1
25	95021	Mount, Motor-Pump	1
26	97400	Hex Bolt, 1/2"-13 x 3/4"	4
27	92356	Coupler, with Spyder	1
28	92114	Pump	1
29	97267	Hex Bolt, 3/8"-16 x 1	2
30	92006	Str, 3/8ML JIC x 1/2ML SAE O'R	2
31	92021	90 Elb, 3/8ML JIC x 3/8FM JIC SVL	2
32	92358	Spyder	1
33	97267	Hex Bolt, 3/8"-16 x 1"	4
34	97072	Swivel Caster	2
35	97225	Locknut, 3/8"-16	4
36	97073	Rigid Caster	2
37	92020	Fitting, Elbow, 90 Degree	1
38	92042	Fitting, Elbow, 45 Degree	1
39	97472	End Cap	2
40	41010	Guard Material	1
41	98043	Calibration Decal	1
42	97208	Jam Nut, 1/2"-13	6
43	595	Sight	1
44	97240	Cap Screw, 10-32x3/8"	2
45	92248	Hose, 3/8" Low Pressure Return 36-1/2" Long	1
46	41047	Adjustable Collar and Guard Assembly (includes #40, #42, #43, and #44)	1
47	92375	Cylinder 3-1/2"	1
48	97383	Lockwasher, 1/2"	4
49	839	Vent Cap	1

Hydraulic Replacement Parts - 2008, 2806, 2100, 2007, 2801, HB-10, 1600

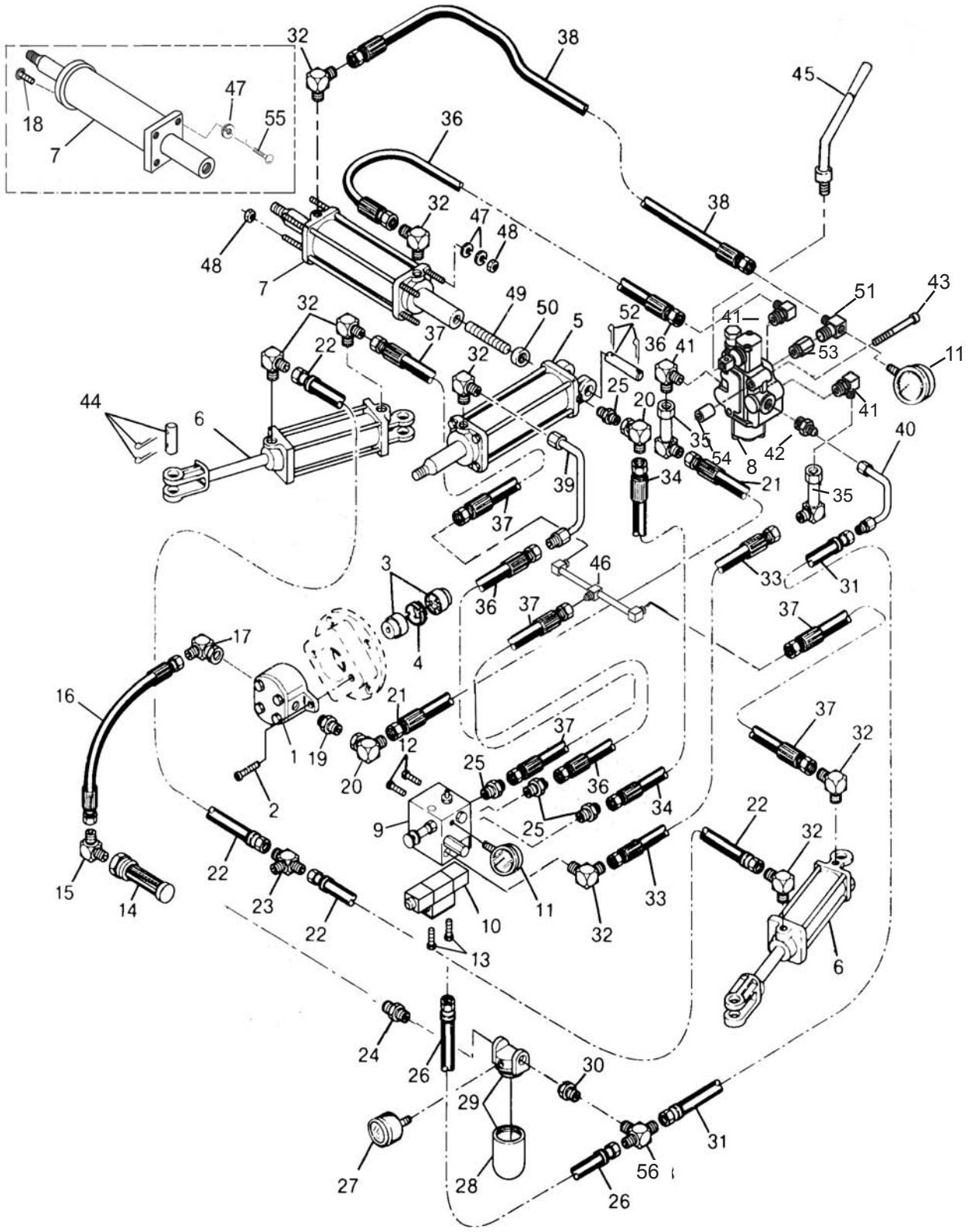

Hydraulic Replacement Parts - 2008, 2806, 2100, 2007, 2801, HB-10, 1600

KEY	PART NO.	DESCRIPTION	QUANTITY 2100	2008 2007	2806 2801	HB-10 1600	REMARKS
1	92116	Pump, Hydraulic	1	1	1	-	
	92117	Pump, Hydraulic (High Speed)	1	1	1	1	For 7½ HP motor. Not available for HB-10
	92114	Pump, Hydraulic	-	-	-	1	
2	97267	Bolt, Hex Hd. 3/8"-16 x 1"	2	2	2	2	
3	92357	Coupler	1	1	1	-	Includes P/N 92358 Spyder
	92356	Coupler	--	-	-	1	
4	92358	Spyder, Rubber	1	1	1	1	
5	92169	Cylinder, Main Industrial	1	1	-	-	Includes Pin
	92235	Seal Kit	1	1	-	-	Includes All Seals for P/N 92169
	92161	Rod, Tie	4	4	-	-	For P/N 92169
	92048	Cartridge, Packing Gland	1	1	-	-	Sold without Seals for P/N 92169
	92158	Cylinder, Main Agricultural	-	-	1	-	Includes Pin
	92208	Seal Kit for 92158	-	-	1	-	For Benders Built After 3/1/91
	92172	Cylinder, Main Welded	-	-	-	1	Includes Pin
6	92150	Cylinder, Side Industrial	2	2	-	-	Includes Pins
	92236	Seal Kit for 92150	1	1	-	-	Includes All Seals for P/N 92150
	92159	Cylinder, Side Agricultural	-	-	2	-	Includes Pins
	92207	Seal Kit for 92159	-	-	1	-	For Benders Built After 3/1/91
	92173	Cylinder, Side Welded	-	-	-	2	Includes Pins
7	92256	Cylinder, Double End, Ag.3½"	1	1	1	1	
	92355	Cylinder, Double End, Ind. 3"	1	1	-	-	For Benders Built Before 5/90
	92209	Seal Kit for 92256	1	1	1	-	For Benders Built After 3/1/91
	92205	Seal Kit for 92355	1	1	-	-	
	92174	Cylinder, Double End	-	-	-	1	Sold as Assembly Only
8	92103	Valve, Swager	1	1	1	1	
9	92165	Valve, Sequence	1	1	1	1	
10	92168	Valve, Directional	1	-	-	-	24 Volt
	92164	Valve, Directional	-	1	1	1	220 Volt
11	92100	Gauge, Pressure	2	2	2	2	
12	97221	Bolt, Hex 3/8"-16 x 1/2"	2	2	2	2	
13	97377	Screw, Sk. Hd. Cap 10-24 x 7/8"	4	4	4	4	
14	92045	Filter, Easy Flow	1	1	1	1	
15	92010	90 Ftg, 1/2ML NPT x 3/8ML JIC	1	1	1	1	
16	92272	Hose, #8, 18" Lg.	1	1	1	1	
17	92077	Elbow, 90 Degrees, 1/2-3/4	1	1	1	-	
	92078	Elbow, 90 Degrees, 1/2-5/8	-	-	-	1	
	92075	Elbow, 90 Degrees, 3/4-3/4	1	1	1	1	(For high speed pump, not avail. on HB-10)
18	97256	Bolt, Hex 1/2" - 13 x 1	-	-	-	2	
19	92026	Str Ftg, 5/8 SAE O'R x 3/8ML JIC	1	1	1	-	
	92006	Str, 3/8ML JIC x 1/2ML SAE O'R	-	-	-	1	
20	92021	90 Elb, 3/8ML JIC x 3/8FM JIC SVL	2	2	1	1	For rear of Main Cyl.-Use Ref. #32 (Mdl. 2801)
21	92273	Hose, #6, 41" Lg.	1	1	1	1	
22	92277	Hose, Return, #6, 24" Lg.	2	2	2	2	
23	92015	Branch, T Ftg, 3/8 x 3/8 x 1/4	2	2	2	2	
24	92028	Str Ftg, 1/2ML NPT x 3/8ML NPT	1	1	1	-	
25	92002	Str. Ftg., $^1/_2$" ML NPT x $^3/_8$" ML JIC	5	5	4	5	
26	92280	Hose, Return, #6, 13" Lg.	1	1	1	1	
27	92292	Gauge, Filter	1	1	1	-	
28	92290	Filter	1	1	1	-	
29	92289	Filter Assembly	1	1	1	-	Includes Filter, Head & Gauge
30	92027	Str Ftg, 1/2ML NPT x 1/4FM NPT	1	1	1	-	
31	92279	Hose, Return, #6, 56" Lg.	1	1	1	1	
32	92009	90 Ftg, 1/2ML NPT x 3/8ML JIC	9	9	10	9	
33	92275	Hose, #6, 58" Lg.	1	1	1	1	
34	92274	Hose, #6, 50" Lg.	1	1	1	1	
35	92023	90 Lg Elb, 3/8 ML JIC x 3/8FM JIC	2	2	2	2	
36	92264	Hose, #6, 23-1/2" Lg.	2	2	2	2	
37	92261	Hose, #6, 15-1/2" Lg.	3	3	3	3	
38	92263	Hose, #6, 19" Lg.	1	1	1	1	
39	92312	Tube, 6-6	1	1	1	1	Cylinder

(Continued on next page)

Hydraulic Replacement Parts - 2008, 2806, 2100, 2007, 2801, HB-10, 1600

(Continued from previous page)

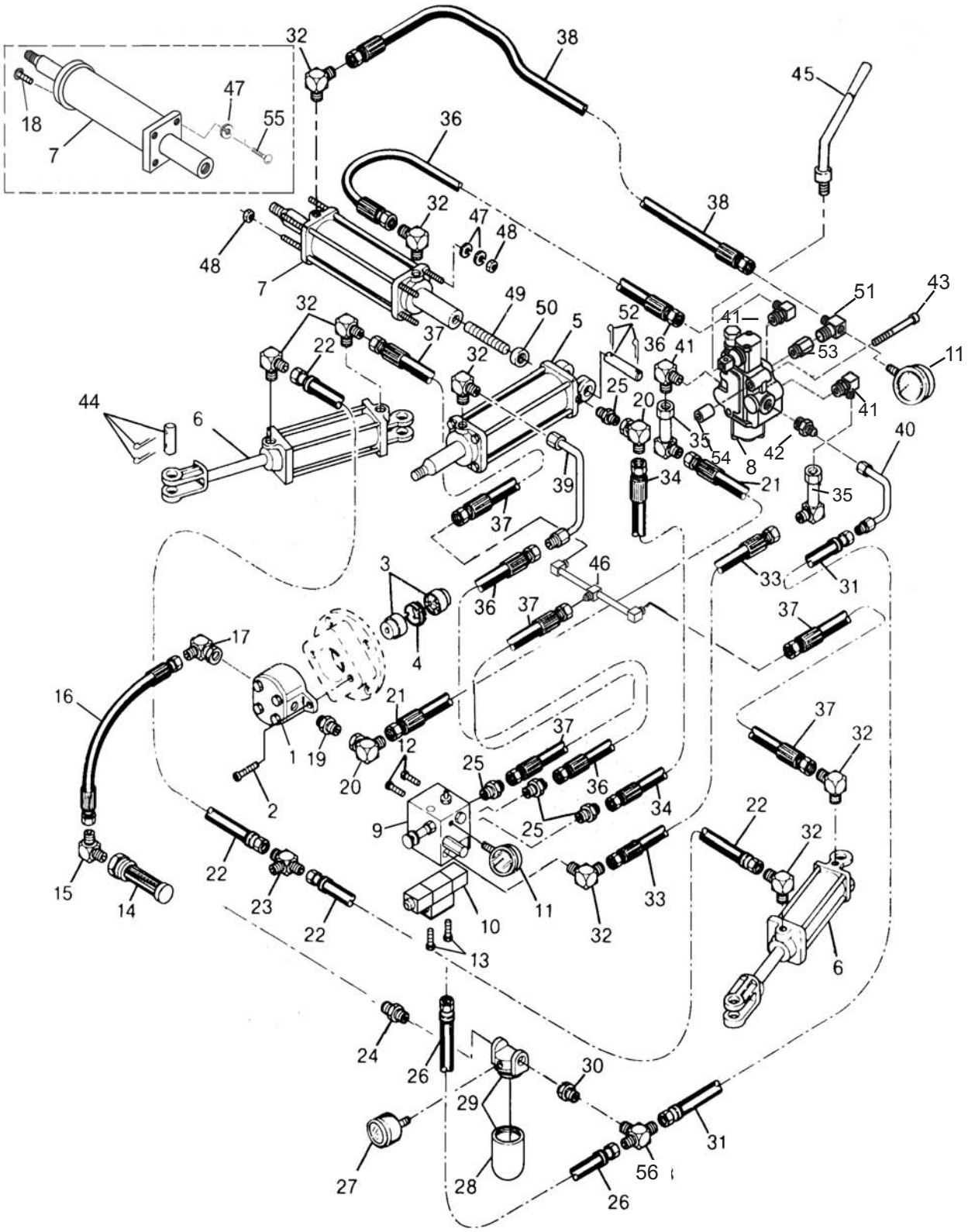

Hydraulic Replacement Parts - 2008, 2806, 2100, 2007, 2801, HB-10, 1600

(Continued from previous page)

KEY	PART NO.	DESCRIPTION	QUANTITY 2100	2008 2007	2806 2801	HB-10 1600	REMARKS
40	92313	Tube, 6-6	1	1	1	1	Valve
41	92004	90 Elb, 1/2ML SAE O'R 3x8ML JIC	3	3	3	3	
42	92006	Str, 3/8ML JIC x 1/2ML SAE O'R	1	1	1	-	
43	97206	Socket Head Cap Screw, 3/8"-16 x 3-1/4"	2	2	2	2	
44	92202	Pin, Side Cylinder	4	4	4	4	Industrial & Agricultural
45	92109	Handle, Swager	1	1	1	1	
46	92314	Fitting, 3-Way	1	1	1	1	
47	97383	Washer, Lock 1/2"	8	8	8	4	
48	97208	Nut, Jam 1/2"-13	6	6	6	-	
49	97051	Stud, Thread 1-14	1	1	1	1	
50	97100	Nut, Knurl	1	1	1	1	
51	92009DT	90 Ftg, 1/2ML NPT x 3/8ML JIC, DT	1	1	1	1	For Pressure Gauge
52	92203	Pin, Main Cylinder	1	1	1	1	Industrial & Agricultural
53	92008	Str Ftg, 1/2ML SAE O'R x 1/2 FM NPT	1	1	1	1	Industrial & Agricultural
54	70045	Bushing, Steel	2	2	2	2	Industrial & Agricultural

Mark Purman checking a welded assembly after it comes from Huth's robotic welder.

Hydraulic Replacement Parts - 1800 & 1901

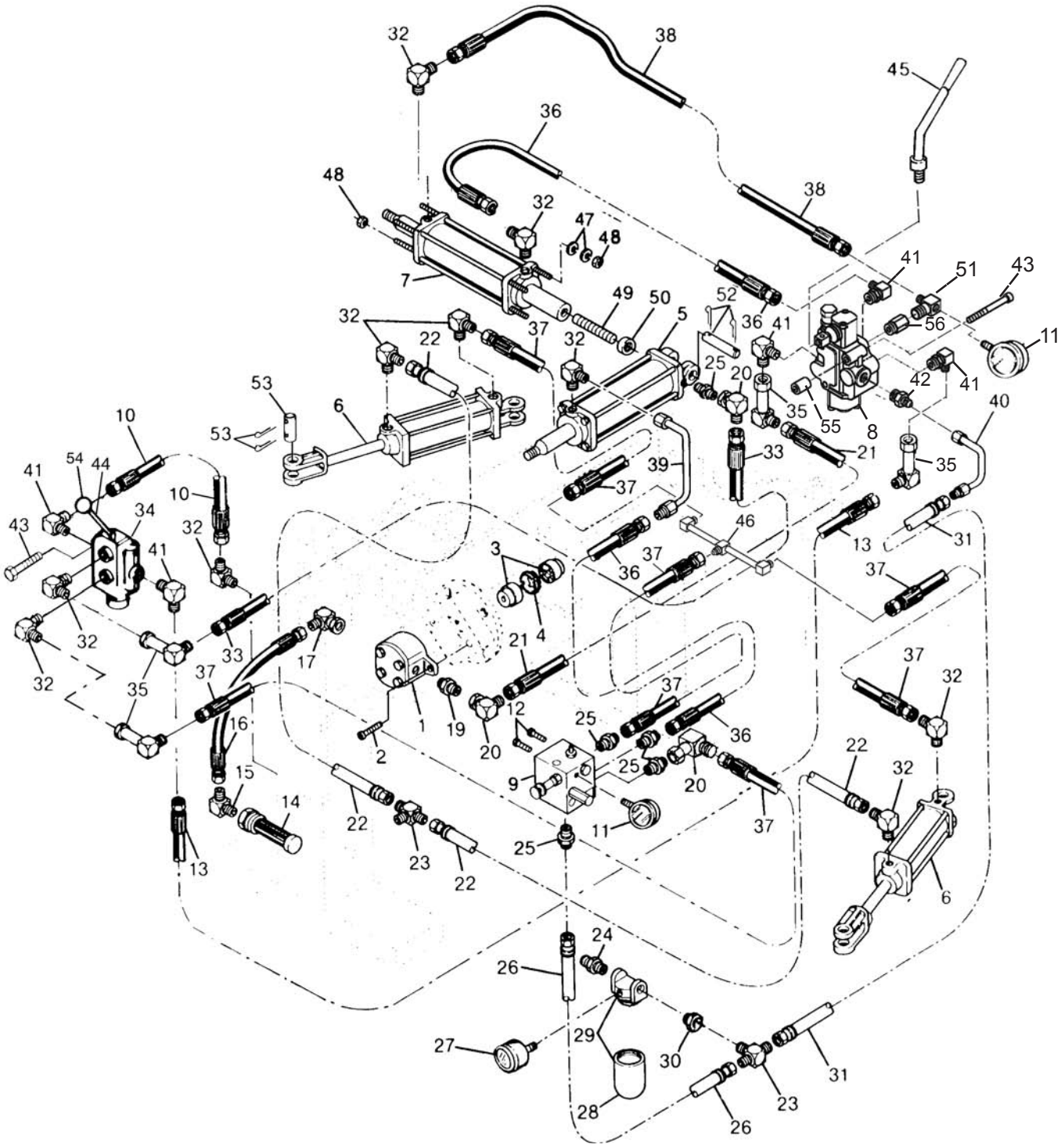

Hydraulic Replacement Parts - 1800 & 1901

KEY	PART NO.	DESCRIPTION	QUANTITY 1800	QUANTITY 1901	REMARKS
1	92116	Pump, Hydraulic	1	1	
	92117	Pump, Hydraulic (High Speed)	1	1	High Speed Option for 7½ H.P Motor
2	97267	Bolt, Hex Hd. 3/8"-16 x 1"	2	2	
3	92357	Coupler	1	1	Includes P/N 92358 Spyder
4	92358	Spyder, Rubber	1	1	
5	92169	Cylinder, Main Industrial	1	-	Includes Pins
	92235	Seal Kit	1	-	Includes All Seals For P/N 92169
	92161	Rod, Tie	4	-	For P/N 92169
	92048	Cartridge, Packing Gland	1	-	Sold Without Seals For P/N 92169
	92158	Cylinder, Main Agricultural	-	1	Sold As Assembly Only
	92208	Seal Kit for 92158	-	1	For Benders Built After 3/1/91
6	92150	Cylinder, Side Industrial	2	-	Includes Pins
	92236	Seal Kit for 92150		1	Includes All Seals For P/N 92150
	92159	Cylinder, Side Agricultural	-	2	Sold as Assembly Only
	92207	Seal Kit for 92159	-	2	
7	92256	Cylinder, Double End, Ag.	-	1	Sold as Assembly Only
	92209	Seal Kit for 92256	1	1	For Benders Built After 3/1/91
	92355	Cylinder, Double End, Ind. 3"	1	1	
	92205	Seal Kit for 92355	1	1	
8	92103	Valve, Swager	1	1	
9	92051	Valve, Sequence	1	1	
10	92278	Hose, Return #6, 15" Lg.	1	1	
11	92100	Gauge, Pressure	2	2	
12	97221	Bolt, Hex 3/8"-16 x 1/2"	2	2	
13	92276	Hose, #6, 62" Lg.	1	1	
14	92045	Filter, Easy Flow	1	1	
15	92010	90 Ftg, 1/2ML NPT x 3/8ML JIC	1	1	
16	92272	Hose, #8, 18" Lg.	1	1	
17	92077	Elbow, 90 Degrees, 8-8	1	1	
19	92026	Str Ftg, 5/8 SAE O'R x 3/8ML JIC	1	1	
20	92021	90 Elb, 3/8ML JIC x 3/8FM JIC SVL	3	2	For rear of Main Cyl.-Use Ref. #32 (Model 2801)
21	92273	Hose, #6, 41" Lg.	1	1	
22	92277	Hose, Return, #6, 24" Lg.	2	2	
23	92015	Branch, T Ftg, 3/8 x 3/8 x 1/4	2	2	
24	92028	Str Ftg, 1/2ML NPT x 3/8ML NPT	1	1	
25	92002	Str. Ftg., $^1/_2$" ML NPT x $^3/_8$" ML JIC	5	4	
26	92280	Hose, Return, #6, 13" Lg.	1	1	
27	92292	Gauge, Filter	1	1	
28	92290	Filter	1	1	
29	92289	Filter Assembly	1	1	Includes Filter, Head & Gauge
30	92027	Str Ftg, 1/2ML NPT x 1/4FM NPT	1	1	
31	92279	Hose, Return, #6, 56" Lg.	1	1	
32	92009	90 Ftg, 1/2ML NPT x 3/8ML JIC	11	12	
33	92275	Hose, #6, 58" Lg.	1	1	
34	92101	Valve, Bending Control	1	1	
35	92023	90 Lg Elb, 3/8 ML JIC x 3/8FM JIC	6	6	
36	92264	Hose, #6, 23-1/2" Lg.	2	2	
37	92261	Hose, #6, 15-1/2" Lg.	4	4	
38	92263	Hose, #6, 19" Lg.	1	1	
39	92312	Tube, 6-6	1	1	Cylinder
40	92313	Tube, 6-6	1	1	Valve
41	92004	Str. Ftg., $^1/_2$" ML NPT x $^3/_8$" ML JIC	3	3	
42	92006	Str, 3/8ML JIC x 1/2ML SAE O'R	1	1	
43	97206	Socket Head Cap Screw, 3/8"-16 x 3-1/4"	4	4	
44	92047	Chain Link Kit	1	1	
45	92109	Handle, Swager	1	1	
46	92314	Fitting, 3-Way, 6-6	1	1	
47	97383	Washer, Lock 1/2"	8	8	
48	97208	Nut, Jam 1/2"-13	6	6	
49	97051	Stud, Thread 1-14	1	1	
50	97100	Nut, Knurl	1	1	
51	92009DT	90 Ftg, 1/2ML NPT x 3/8ML JIC, DT	1	1	For Pressure Gauge
52	92203	Pin, Main Cylinder	1	1	Industrial & Agricultural
53	92202	Pin, Side Cylinder	4	4	Industrial & Agricultural
54	92115	Handle, Valve Control	1	1	
55	70045	Bushing, Steel	2	2	Industrial & Agricultural
56	92008	Str Ftg, 1/2ML SAE O'R x 1/2 FM NPT	1	1	Industrial & Agricultural

Hydraulic Replacement Parts - 1901S

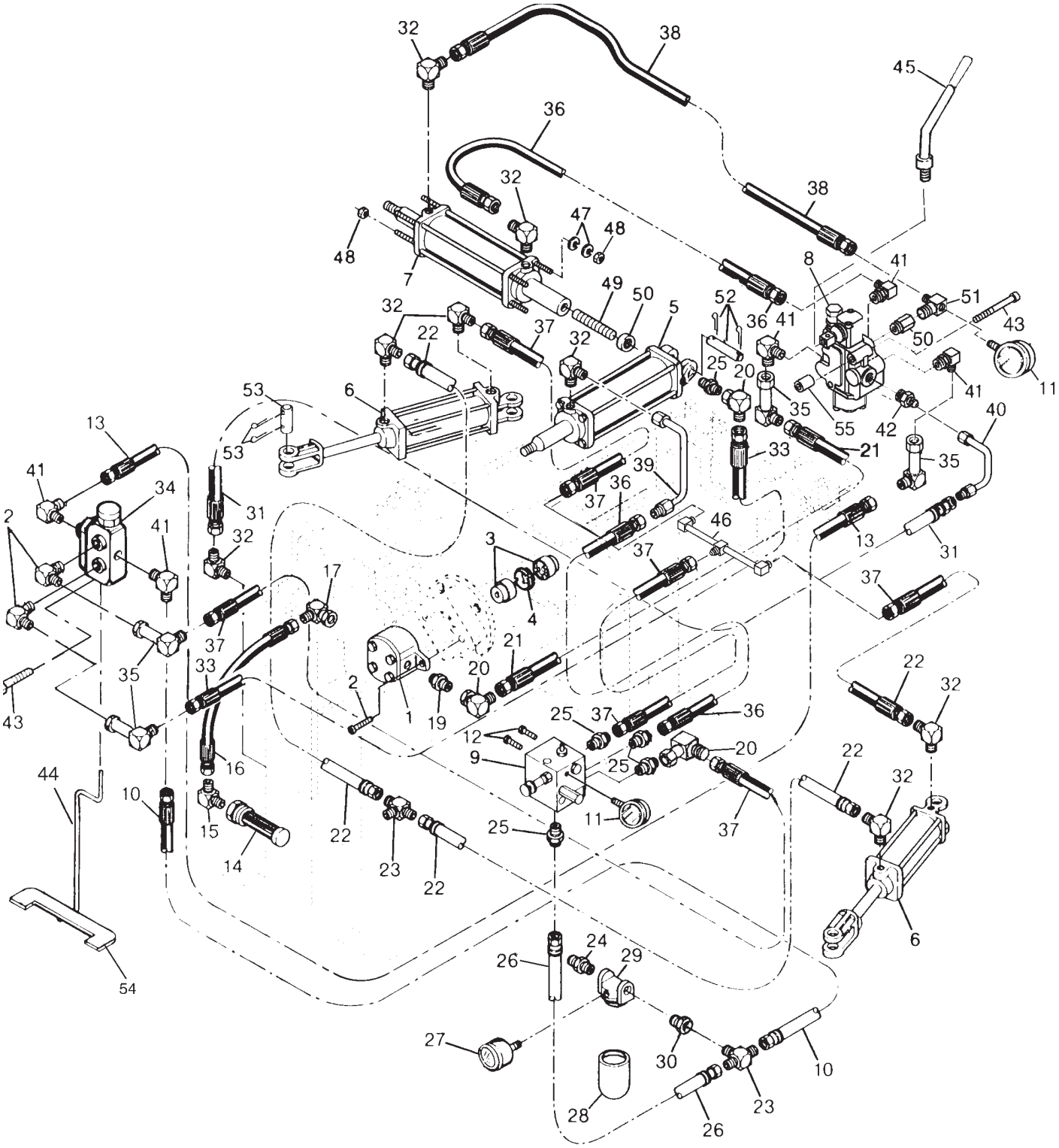

Hydraulic Replacement Parts - 1901S

KEY	PART NO.	DESCRIPTION	QUANTITY 1901S	REMARKS
1	92116	Pump, Hydraulic	1	Standard
	92117	Pump, Hydraulic (High Speed)	1	High Speed Option for 7½ H.P Motor
2	97267	Bolt, Hex Hd. 3/8"-16 x 1"	2	
3	92357	Coupler	1	
4	92358	Spyder, Rubber	1	
5	92158	Cylinder, Main Agricultural	1	Sold As Assembly Only
	92208	Seal Kit for 92158	1	For Benders Built After 3/1/91
6	92159	Cylinder, Side Agricultural	2	Sold As Assembly Only
	92207	Seal Kit for 92159	1	For Benders Built After 3/1/91
7	92256	Cylinder, Double End, Ag.	1	Sold As Assembly Only
	92209	Seal Kit for 92256	1	For Benders Built After 3/1/91
8	92103	Valve, Swager	1	
9	92051	Valve, Sequence	1	
10	92278	Hose, Return #6, 15" Lg.	1	
11	92100	Gauge, Pressure	2	
12	97221	Bolt, Hex 3/8"-16 x 1/2"	2	
13	92276	Hose, #6, 62" Lg.	1	
14	92045	Filter, Easy Flow	1	
15	92010	90 Ftg, 1/2ML NPT x 3/8ML JIC	1	
16	92272	Hose, #8, 18" Lg.	1	
17	92077	Elbow, 90 Degrees, 8-8	1	
19	92026	Str Ftg, 5/8 SAE O'R x 3/8ML JIC	1	
20	92021	90 Elb, 3/8ML JIC x 3/8FM JIC SVL	2	
21	92273	Hose, #6, 41" Lg.	1	
22	92277	Hose, Return, #6, 24" Lg.	2	
23	92015	Branch, T Ftg, 3/8 x 3/8 x 1/4	2	
24	92028	Str Ftg, 1/2ML NPT x 3/8ML NPT	1	
25	92002	Str. Ftg., $^1/_2$" ML NPT x $^3/_8$" ML JIC	4	
26	92280	Hose, Return, #6, 13" Lg.	1	
27	92292	Gauge, Filter	1	
28	92290	Filter	1	
29	92289	Filter Assembly	1	Includes Filter, Head & Gauge
30	92027	Str Ftg, 1/2ML NPT x 1/4FM NPT	1	
31	92279	Hose, Return, #6, 56" Lg.	1	
32	92009	90 Ftg, 1/2ML NPT x 3/8ML JIC	12	
33	92275	Hose, #6, 58" Lg.	1	
34	92101	Valve, Bending Control	1	
35	92023	90 Lg Elb, 3/8 ML JIC x 3/8FM JIC	6	
36	92264	Hose, #6, 23-1/2" Lg.	2	
37	92261	Hose, #6, 15-1/2" Lg.	4	
38	92263	Hose, #6, 19" Lg.	1	
39	92312	Tube, 6-6	1	Cylinder
40	92313	Tube, 6-6	1	Valve
41	92004	Str. Ftg., $^1/_2$" ML NPT x $^3/_8$" ML JIC	3	
42	92006	Str, 3/8ML JIC x 1/2ML SAE O'R	1	
43	97206	Socket Head Cap Screw, 3/8"-16 x 3-1/4"	4	
44	97379	Rod, Connecting	1	
45	92109	Handle, Swager	1	
46	92314	Fitting, 3-Way, 6-6	1	
47	97383	Washer, Lock 1/2"	8	
48	97208	Nut, Jam 1/2"-13	6	
49	97051	Stud, Thread 1-14	1	
50	97100	Nut, Knurl	1	
51	92009DT	90 Ftg, 1/2ML NPT x 3/8ML JIC, DT	1	For Pressure Gauge
52	92203	Pin, Main Cylinder	1	
53	92202	Pin, Side Cylinder	4	
54	97380	Pedal, Foot Control	1	
55	70045	Bushing, Steel	2	
56	92008	Str Ftg, 1/2ML SAE O'R x 1/2 FM NPT	1	

Part No.	Description	Page
HB-10	Bender Package	6
010	Profit Package	21
011	Profit Package	21
013	Profit Package	22
016	Profit Package - Export	22
101	3" Header Collector	26
102	3-1/2" Header Collector	26
110	1" Swage Die	26
112	1-1/2" Swage Die	26
114	1-1/4" Swage Die	26
118	1-1/8" Swage Die	26
120	2" Swage Die	26
123	2-3/8" Swage Die	26
125	2-1/4" Swage Die	26
128	2-1/8"(54mm) Swage Die	26
129	2-3/4" Swage Die	26
130	3" Swage Die	26
134	1-3/4" Swage Die	26
138	1-3/8" Swage Die	26
140	40mm Swage Die	26
142	42mm Swage Die	26
145	45mm Swage Die	26
148	48mm Swage Die	26
149	50mm Swage Die	26
150	2-1/2" Swage Die	26
155	55mm Swage Die	26
158	1-5/8" Swage Die	26
160	60mm Swage Die	26
178	1-7/8" Swage Die	26
210	1" Clamp Collets	27
212	1-1/2" Clamp Collets	27
214	1-1/4" Clamp Collets	27
218	1-1/8" Clamp Collets	27
220	2" Clamp Collets	27
223	2-3/8" Clamp Collets	27
225	2-1/4" Clamp Collets	27
228	2-1/8" Clamp Collets	27
234	1-3/4" Clamp Collets	27
238	1-3/8" Clamp Collets	27
250	2-1/2" Clamp Collets	27
258	1-5/8" Clamp Collets	27
278	1-7/8" Clamp Collets	27
400	Segment 1-1/4" to 1-1/2"	28
403	Segment 2-3/4" to 3-1/8"	28
404	Segment 1-1/8"	28
405	Flaring Segment Set* 1" I.D. to 1-1/2"	28
406	Segment 3-1/8" to 3-1/2"	28
408	Segment 3-1/2" to 4"	28
410	Segment 1-3/4"	29
411	Segment 2", 2-1/4"	29
412	Segment 2-1/2"	29
413	Flange Ring 2"	29
414	Flange Ring 2-1/4"	29
418	Flange Ring 2-1/2"	29
419	Segment 2"	29
420	Segment 2-1/4"	29
421	Segment 2-1/2"	29
422	Segment 1-1/2" to 1-3/4"	28
423	Segment 1-3/4" to 2-1/8"	28
424	Segment 2-1/8" to 2-1/2"	28
425	Segment 2-1/2" to 2-3/4"	28
440	Flaring SegmentSet (1-1/2" I.D. to 2-1/2"	28
441	Flaring SegmentSet (2-1/2" I.D. to 3-1/2"	28
450	Segment 4" to 4-7/8"	28
451	Segment 4-7/8" to5-1/2"	28
452	Segment 3"	29
470	Segment 1"	28
473	Segment Set, 1-1/2" - 1-3/4"	11, 19, 28, 58, 59, 61
474	Segment Set, 1-3/4" - 2-1/8"	11, 19, 28, 58, 59, 61
475	Segment Set, 2-1/8" - 2-1/2"	11, 19, 28, 58, 59, 61
476	Segment Set, 2-1/2" - 3"	11, 61, 28
477	Segment Set, 3"-3-1/2"	11, 61, 28
481	Segment 2-7/8" to 3-1/2"	29
482	Segment 3-3/8" to 4"	29
483	Segment 3-7/8" to 4-1/2"	29
484	Segment 4-3/8" to 5"	29
485	Segment 4-7/8" to 5-1/2"	29
486	Segment 5-3/8" to 6"	29
497	Arbor, 11/2" - 31/2"	58, 59
498	Arbor Tip Small, 1-1/2" - 1-3/4"	11, 19, 28, 58, 59, 61
499	Large Arbor Tip, 1-3/4" - 3-1/2"	11, 19, 28, 58, 59, 61
499	Tip: 1-3/4" to 3-1/2"	28
500	Arbor 1-1/4" to 1-1/2"	28
501	Arbor 1-1/2" to 1-3/4"	28
502	Arbor 1-3/4" to 2-3/4"	28
503	Arbor 2-3/4" to 5-1/2"	28
508	Arbor	11, 19, 28, 61
512	Adjustable Collar for 2-3/4" through 5-1/2"	54
513	Snap Ring Nut	19, 54
515	Set Screw	19, 56
518	Flare Tool 1-1/2", 2"	26
519	Flare Tool 1-3/4", 1-5/8" Ball Joint Tool	26
522	Adjustable Collar	19, 54
523	Adjustable collar for 2-3/4" through 5-1/2"	54
524	Arbor Adapter	43
527	Adjustable Collar Assembly	54, 65
528	Extension, 527 Adjustable Collar	54, 65
550	1-3/4" (M) Ball Joint Tool	26
551	1-7/8" (M) Ball Joint Tool	26
552	2" (M) Ball Joint Tool	26
553	2-1/4" (M) Ball Joint Tool	26
554	2-1/2" (M) Ball Joint Tool	26
555	1-3/4", 1-7/8", 2" (F) Ball Joint Tool	26
556	2-1/4" to 2-1/2" (F) Ball Joint Tool	26
557	1-3/4" to 2-1/2" (D) Ball Joint Tool	26
558	2-5/8" to2-3/4" (D) Ball Joint Tool	26
564	2-3/4" to 3-1/2" (F) Ball Joint Tool	26
570	Segment	37
574	Arbor 2-7/8" to 6"	29
575	Arbor 15/16" to 1/14"	28
595	Sight	58, 59, 61
595	Gun Sight	19
600	Tooth	31
603	Tooth	31
604	Tooth	32
605	Tooth	34
606	Tooth	31
608	Tooth	31
610	Tooth	34
611	Tooth	37
612	Tooth	37
619	Tooth	34
620	Tooth	34
621	Tooth	34
622	Tooth	31
623	Tooth	31
624	Tooth	32
625	Tooth	32
640	Tooth	33
641	Tooth	35
650	Tooth	32
651	Tooth	32
652	Tooth	34
670	Tooth	32
673	Tooth	33
674	Tooth	33
675	Tooth	33
676	Tooth	33
677	Tooth	33, 35, 36
681	Tooth	35
682	Tooth	35
683	Tooth	35
684	Tooth	36
685	Tooth	36
686	Tooth	36
710	1" Clamp Collets	27
712	1-1/2" Clamp Collets	27
714	1-1/4" Clamp Collets	27
718	1-1/8" Clamp Collets	27
720	2" Clamp Collets	27
723	2-3/8" Clamp Collets	27
725	2-1/4" Clamp Collets	27
728	2-1/8" Clamp Collets	27
734	1-3/4" Clamp Collets	27
738	1-3/8" Clamp Collets	27
750	2-1/2" Clamp Collets	27
758	1-5/8" Clamp Collets	27
760	50mm to 45mm Reducing Die	26
761	55mm to 50mm Reducing Die	26
762	60mm to 55mm Reducing Die	26
778	1-7/8" Clamp Collets	27
780	2" to 1-3/4" Reducing Die	26
781	2-1/4" to 2" Reducing Die	26
782	2-1/2" to 2-1/4" Reducing Die	26
783	3" to 2-1/2" Reducing Die	26
784	2" to 1-7/8" Reducing Die	26
785	1-3/4" to 1-5/8" Reducing Die	26
786	1-5/8" to 1-1/2" Reducing Die	26
787	1-1/2" to 1-3/8" Reducing Die	26
788	1-3/8" to 1-1/4" Reducing Die	26
789	1-1/4" to 1-1/8" Reducing Die	26
790	3" to 2-3/4" Reducing Die	26
797	Die Adapter	43
798	Die Adapter	43
800	Pusher Block	39
804	Handle	27, 53
807	Collet Holder	27
807	Collet Holder (Uses 200 Series Collets)	53
808	Long Handle-9"	27, 53
809	Bolt, 6"	27, 53
810	Bolt 5-1/2"	27
810	Bolt, 5-1/2"	53
811	Washer	27, 53
812	Nut	27, 53
813	Washer, Brass	27, 53
815	Die Holder	41
816	Die Holding Pin	41
817	Handle, 12"	27, 53
818	Holder	18, 41
819	Threaded Stud	18
820	Quick Disconnect Tool Holder	41
820	Non-Threaded Adapter	18, 41
823	Threaded Shoulder Stud	18, 41, 57
824	uick-Trick Adapter	43
825	Quick Trick	18, 41
829	Cutter Blade #50	42
830	Axle for #50	42
833	Cutter Blades #30-133	42
835	Tube Cutter #30for 3"	42
836	Axle #30	42
838	Breather Cap	61
839	Vent Cap	63, 65
839	Vent Breather Cap	42
844	Axle Assembly #133	42
852	Blank Plate	39
853	Pipe Flanger 1-1/2" to 3-1/2"	26
854	Ram Die Pin Clip	39
855	Die Pin-DP200	39
856	Bumper Die Hex Pin	39
859	Asst. of 25 O-Rings	29
860	Rubber O-Ring	38

Part No.	Description	Page
861	Rubber O-Ring	38
862	Rubber O-Ring	37
863	Rubber O-Ring	37
864	Rubber O-Ring	37
865	Steel O-Ring	37, 38
866	Steel O-Ring	38
867	Steel O-Ring	37
868	Steel O-Ring	37
869	Steel O-Ring	37
870	Asst. of 50 O-Rings	29
871	Asst. of 10 O-Rings	29
872	O-Ring for 481	29
872	Urethane O-Ring	38
873	O-Ring for 482	29
873	Urethane O-Ring	38
874	Steel O-Ring	33
875	O-Ring for 483	29
875	Urethane O-Ring	38
877	Urethane O-Ring	29
877	Urethane O-Ring	38
878	O-Ring for 450, 481, 482	29
878	Urethane O-Ring	38
879	O-Ring for 451, 483, 485	29
879	Urethane O-Ring	38
880	O-Ring for 451, 484, 486	29
880	Urethane O-Ring	38
881	O-Ring for 484	29
881	Urethane O-Ring	38
882	O-Ring for 485, 486	29
882	Urethane O-Ring	38
884	Collet Holder	27
884	Collet Holder (Uses 200 Series Collets)	53
890	Collet Holder	27
890	Collet Holder (Uses 700 Series Collets)	53
891	Collet Holder	63
891	Collet Holder	27
891	Collet Holder	53
892	Collet Holder, 2-3/4", 3" Collet	27, 53
950	Program Card System	40
950	Program Card System	20
951	Program Card Subscription	40
951	Program Card Subscription	20
952	Program Card (blank)	40
952	Program Card (Blank)	20
980	Program Card System on Disk	20
980	Program Card on disk	40
981	Program Card Subscription (Elec. Format)	20
982	Exhaust Pipe Shaper	15
984	Exhaust Pipe Shaper	15
985	Rod Bracket Bender	15
986	Exhaust Support Stand	17
987	Grommet Grabber	15
988	Card Cabinet	20, 40
991	Rotation Dial Knob	40
992	Rotation Dial Face	40
993	Rotation Dial Lens	40
994	Rotation Dial Spring	40
995	Program Card Tray	20
995	Program Card Tray	40
996	Rotation Dial	20, 40
998	Card Sleeves (pkg. 1000)	40
998	Card Sleeves	20
1000	Square Tube Back Shoe	18, 24
1012	1/2" Back Shoes	25
1027	1/2" Half Shoe	25
1029	5/8" Half Shoe	25
1031	7/8" Half Shoe	25
1033	1-1/8" Half Shoe	25
1034	3/4" Back Shoes	25
1035	3/4" Half Shoe	25
1036	1-3/4" Three-Quarter Shoe	25
1037	1" Half Shoe	25
1038	1-1/2" Half Shoe	25
1039	1-1/4" Half Shoe	25
1040	1-3/4" Half Shoe	25
1041	1-3/8" Half Shoe	25
1042	1-5/8" Half Shoe	25
1043	1-7/8" Half Shoe	25
1044	1-7/8" Three-Quarter Shoe	25
1045	2" Half Shoe	25
1046	2" Three-Quarter Shoe	25
1051	2-1/8" (54mm) Half Shoe	25
1053	2-1/8" (54mm) Three-Quarter Shoe Shoe	25
1058	5/8" Back Shoes	25
1078	7/8" Back Shoes	25
1079	Full Shoe Spacer	19, 39
1080	Half Shoe Spacer	19, 39
1081	1-5/8" Quarter Shoe	25
1082	1-1/2" Quarter Shoe	25
1083	1-3/8" Quarter Shoe	25
1084	1-1/4" Quarter Shoe	25
1100	1" Back Shoes	25
1112	1-1/2" Back Shoe	25
1114	1-1/4" Back Shoes	25
1118	1-1/8" Back Shoes	25
1134	1-3/4" Back Shoe	25
1138	1-3/8" Back Shoes	25
1158	1-5/8" Back Shoe	25
1178	1-7/8" Back Shoe	25
1200	2" Back Shoe	25
1218	2-1/8" (54mm) Back Shoe	25
1234	2-3/4" Back Shoe	25
1235	2-3/4" Three-Quarter Shoe	25
1236	2-3/4" Half Shoe	25
1256	1-5/16" Back Shoes	25
1340	40mm Back Shoe	25
1342	42mm Back Shoe	25
1345	45mm Back Shoe	25
1348	48mm Back Shoe	25
1349	50mm Back Shoe	25
1350	3" Back Shoe	25
1351	3" Three-Quarter Shoe	25
1352	3" Half Shoe	25
1355	55mm Back Shoe	25
1355	55mm Half Shoe	25
1356	1-5/16" Half Shoe	25
1360	60mm Back Shoe	25
1405	40mm Half Shoe	25
1425	42mm Half Shoe	25
1445	55mm Half Shoe	25
1448	48mm Half Shoe	25
1450	50mm Half Shoe	25
1455	45mm Half Shoe	25
1460	60mm Half Shoe	25
1540	40mm Three-Quarter Shoe	25
1542	42mm Three-Quarter Shoe	25
1545	45mm Three-Quarter Shoe	25
1548	48mm Three-Quarter Shoe	25
1550	50mm Three-Quarter Shoe	25
1555	55mm Three-Quarter Shoe	25
1560	60mm Three-Quarter Shoe	25
1600	Bender	8
1611	Power Unit	58
1612	Air/Oil Pump	59
1617	Power Unit	61
1673	Portable Swager/Expander	9
1674	Portable Expander	10
1680	Mitey Mate II(tm)	12
1681	Hose Assembly Kit	58
1685	Mitey Mate Jr.(tm)	12
1690	Bench-top Expander	11
1691	Portable Expander	11
1692	End-Finishing Upgrade Kit	44
1700	48mm Clamp Collets	26
1705	50mm Clamp Collets	26
1710	1" Clamp Collets	26
1712	1-1/2" Clamp Collets	26
1714	1-1/4" Clamp Collets	26
1718	1-1/8" Clamp Collets	26
1720	2" Clamp Collets	26
1723	2-3/8" Clamp Collets	26
1725	2-1/4" Clamp Collets	26
1728	2-1/8" (54mm) Clamp Collets	26
1729	2-3/4" Clamp Collets	26
1730	3" Clamp Collets	26
1734	1-3/4" Clamp Collets	26
1738	1-3/8" Clamp Collets	26
1740	40mm Clamp Collets	26
1742	42mm Clamp Collets	26
1745	45mm Clamp Collets	26
1750	2-1/2" Clamp Collets	26
1755	55mm Clamp Collets	26
1756	1-5/16" Clamp Collets	26
1758	1-5/8" Clamp Collets	26
1760	60mm Clamp Collets	26
1778	1-7/8" Clamp Collets	26
1959	Frame w/o Hydraulics, for 3" Cylinder	53
1960	Swager Frame with Hydraulics; 3-1/2"	53
1961	Swager Frame w/o Hydraulics, for 3-1/2"	53
1985	Collet Closer Kit	27, 53
1986	Accu-Sizer for 3" Cylinders	19
1987	Auto-Flange(tm) Kit	41
1988	3" End Finishing Tool kit	23, 41
1989	1-7/8" OptionalPackage	23
1990	Accu-Sizer for 3-1/2" Swager Cylinders	19
1992	3" Tooling Package	23
1993	3" Tooling Package	23
1994	Quick-Change Pin Kit	18, 23
1995	23/4" Tooling Package	23
1996	3" Short Tooling Package	23
1997	23/4" Short Tooling Package	23
2008	Knee Control Bender	4
2806	Knee Control Bender	4
3012	1/2" 3" Radius Die	24
3034	3/4" 3" Radius Die	24
3040	40mm 3" Radius Die	24
3042	42mm 3" Radius Die	24
3045	45mm 3" Radius Die	24
3048	48mm 3" Radius Die	24
3050	50mm 3" Radius Die	24
3055	55mm 3" Radius Die	24
3056	1-5/16" 3" Radius Die	24
3058	5/8" 3" Radius Die	
3078	7/8" 3" Radius Die	24
3100	1" 3" Radius Die	24
3112	1-1/2" 3" Radius Die	24
3114	1-1/4" 3" Radius Die	24
3118	1-1/8" 3" Radius Die	24
3134	1-3/4" 3" Radius Die	24
3138	1-3/8" 3" Radius Die	24
3158	1-5/8" 3" Radius Die	24
3178	1-7/8" 3" Radius Die	24
3200	2" 3" Radius Die	24
3218	2-1/8" (54mm) 3" Radius Die	24
3310	1" (3" Rad.) Square Die	18, 24
3334	3/4" (3" Rad.) Square Die	18, 24
3414	2-1/4" 3" Radius Die	24
3438	2-3/8" 3" Radius Die	24
4012	1/2" 4" Radius Die	24
4034	3/4" 4" Radius Die	24
4040	40mm 4" Radius Die	24
4042	42mm 4" Radius Die	24
4045	45mm 4" Radius Die	24
4048	48mm 4" Radius Die	24
4050	50mm 4" Radius Die	24
4055	55mm 4" Radius Die	24
4056	1-5/16" 4" Radius Die	24
4058	5/8" 4" Radius Die	24
4060	60mm 4" Radius Die	24
4078	7/8" 4" Radius Die	24
4100	1" 4" Radius Die	24
4112	1-1/2" 4" Radius Die	24
4114	1-1/4" 4" Radius Die	24
4118	1-1/8" 4" Radius Die	24
4134	1-3/4" 4" Radius Die	24

Part No.	Description	Page
4138	1-3/8" 4" Radius Die	24
4158	1-5/8" 4" Radius Die	24
4178	1-7/8" 4" Radius Die	24
4200	2" 4" Radius Die	24
4211	2-1/4" Back Shoe	25
4218	2-1/8" (54mm) 4" Radius Die	24
4237	2-3/8" Back Shoe	25
4310	1" (4" Rad.) Square Die	18, 24
4314	1-1/4" (4" Rad.) Square Die	18, 24
4314	1-1/4" (4" Rad.) Square Die	18, 24
4334	3/4" (4" Rad.) Square	18, 24
4409	2-1/2" 4" Radius Die	24
4410	2-1/2" Half Shoe	25
4412	2-1/2" Back Shoe	25
4413	2-1/4" Three-Quarter Shoe	25
4414	2-1/4" 4" Radius Die	24
4415	2-1/2" Three-Quarter Shoe	25
4416	2-1/4" Half Shoe	25
4437	2-3/8" Half Shoe	25
4438	2-3/8" 4" Radius Die	24
4820	2" Full 4" Radius Die	24
4834	1-34" Full 4" Radius Die	24
4858	1-5/8" Full 4" Radius Die	24
5034	3/4" 5" Radius Dies	24
5040	40mm 5" Radius Die	24
5042	42mm 5" Radius Die	24
5045	45mm 5" Radius Die	24
5048	48mm 5" Radius Die	24
5050	50mm 5" Radius Die	24
5055	55mm 5" Radius Die	24
5056	1-5/16" 5" Radius Dies	24
5060	60mm 5" Radius Die	24
5100	1" 5" Radius Dies	24
5112	1-1/2" 5" Radius Dies	24
5114	1-1/4" 5" Radius Dies	24
5118	1-1/8" 5" Radius Dies	24
5134	1-3/4" 5" Radius Dies	24
5138	1-3/8" 5" Radius Dies	24
5158	1-5/8" 5" Radius Dies	24
5178	1-7/8" 5" Radius Dies	24
5200	2" 5" Radius Dies	24
5218	2-1/8" (54mm) 5" Radius Dies	24
5312	1-1/2" (5" Rad.) Square Die	18, 24
5314	1-1/4" (5" Rad.) Square Die	18, 24
5412	2-1/2" 5" Radius Dies	24
5414	2-1/4" 5" Radius Dies	24
5438	2-3/8" 5" Radius Dies	24
5530	3" 5" Radius Dies	24
5534	2-3/4" 5" Radius Dies	24
5812	1-1/2" Full 5" Radius Die	24
5820	2" Full 5" Radius Die	24
5824	2-1/4" Full 5" Radius Die	24
5825	2-1/2" Full 5" Radius Die	24
5834	1-3/4" Full 5" Radius Die	24
5878	1-7/8" Full 5" Radius Die	24
6006	A-Train	17
6007	Oil Filter Crusher	14
6010	Optional Floor Stand	14
6020	Quick Crush	14
6021	Drain cart	57
34012	Frame, Swager	63
41010	Guard Material	61, 63, 65
41011	Swager Box Cover Material	63
41020	Swage Box Hinge Bracket	55
41032	Handle, Swager	53, 73
41040	Bumper Die Guard w/Die Retainer	39
41040	Bumper Die Guard w/Die Retainer for 3 and	55
41041	Ram Die Guard w/180° Die Retainer	39
41041	Ram Die Guard w/ 180o Die Retainer for 5"	55
41042	Safety Guard	19
41042	Expander Guard for 3" Cylinder	55
41043	Swager Box Guard Assembly	55
41044	Gate Guard w/ Rivets	55
41045	Expander Guard for 3-1/2" Cylinder	55
41046	Expander Guard for 3" Cylinder	54
41047	Adjustable Collar	61, 63, 65
41047	Adjustable Collar Guard Assembly	54
41050	Safety Guard Kit Complete for 3" Cylinder	55
41051	Safety Guard Kit Complete for 3-1/2"	55
50058	Rubber Foot	61
70045	Bushing, Steel	63, 71, 73
90092	Keyway, 5/16" x 5/16"	55
90093	Inside Snap Ring	55
90094	Outside Snap Ring	55
91025	Flat Tool Tray	55
91033	Sled for Bender	54
91034	Left Gate	55
91035	Right Gate	55
91042	Gate Pin	55
91047	Guide Plate	54
91050	Head Block Bushing	55
91052	Gate Bushing	55
91060	Swager Arm	63
91060	Collet Closer Arm	27, 53
91061	Hinge Block	63
91061	Collet Hinge Block	27, 53
91075	Swager Tray	55
91076	Supports for Tray 91075	55
91078	Swager Tray Assy. Complete	55
91092	Bracket for 91096	55
91096	Deluxe Tray	55
91127	Crusher door assembly	57
91128	Crusher body	57
91129	Ram plate assembly	57
91150	Pointer (Brass)	54
91151	Depth-of-Bend Support	54
91152	Handle	54
91153	Pointer	54
91160	Depth-of-Bend Plate	54
91160	Depth-of-Bend Plate	54
91166	Ready Rak	16, 55
91176	Ready Rak II	16, 55
92002	Str. Ftg., 1/2" ML NPT x 3/8" ML JIC Model 1690	61, 67, 71, 74
92004	Str. Ftg., 1/2" ML NPT x 3/8" ML	58, 63, 65, 69, 71, 73
92006	Str, 3/8ML JIC x 1/2ML SAE O'R.	63, 65, 67, 67, 71, 73
92008	Str Ftg, 1/2ML SAE O'R x 1/2 FM NPT	63, 69, 71, 73
92009	90 Ftg, 1/2ML NPT x 3/8ML JIC	61, 63, 65, 67, 71, 73
92010	90 Ftg, 1/2M NPT x 1/2ML JIC	63, 65, 67, 70, 71, 73
92015	Branch, T Ftg, 3/8 x 3/8 x 1/4	67, 71, 73
92020	Fitting, Elbow, 90 Degree	63, 65
92021	90 Elb, 3/8ML JIC x 3/8FM JIC SVL	63, 65, 67, 71, 73
92023	90 Lg Elb, 3/8 ML JIC x 3/8FM JIC	63, 67, 71, 73
92026	Str Ftg, 5/8 SAE O'R x 3/8ML JIC	67, 71, 76
92027	Str Ftg, 1/2ML NPT x 1/4FM NPT	67, 71, 76
92028	Str Ftg, 1/2ML NPT x 3/8ML NPT	67, 71, 76
92042	Fitting, Elbow, 45 Degree	63, 65
92045	Filter, Easy Flow	63, 65, 71, 73
92045	Easy Flow Filter	51
92047	Chain Link Kit	53, 71
92048	Cartridge, Packing Gland	52, 67, 71
92051	Valve, Sequence	51, 71, 73
92054	Sequence Valve DO2	51
92065	90° O-Ring Fitting, 3/8" St. x 3/8" JIC Extra Long	61, 65
92066	45° O-Ring Fitting, 3/8" St. Thread x 3/8" JIC	61
92071	90° O-Ring Fitting, 3/8" St. Thread x 3/8" JIC	61, 65
92072	3/8 NPT x 1/4 NPT Hex	59
92075	Elbow, 90 Degrees, 3/4-3/4	67
92077	Elbow, 90 Degrees, 1/2-3/4	67, 71, 73
92078	Fitting, Elbow, 90 Degree	63, 65, 67
92079	Fitting, Straight Swivel	65
92099	Pressure Gauge, Model 1690	61
92100	Pressure Gauge, Model 1691	61, 63, 65, 67, 71, 73
92100	Gauge, Hydraulic	39
92101	Valve, Bending Control	52, 71, 73
92103	Valve, Swager	52, 67, 61, 73
92105	Valve for Swager with fittings	52
92109	Handle, Swage Valve	63, 65, 69, 71, 73
92109	Handle	53
92111	Sequence Valve Knob	51
92112	Valve for 1674	52, 65
92114	Pump	63, 65
92115	Handle, Valve Control	53, 71
92116	Pump, Hydraulic	50, 67, 71, 73
92117	Pump, Hydraulic (High Speed)	50, 67, 71, 73
92121	Adaptor Plate	51
92150	Cylinder, Side Ind.	52, 67, 71
92152	8 x7 Air Cylinder	57
92156	Cylinder Body Assembly	58, 59
92158	Cylinder, Main Ag.	52, 67, 71, 73
92159	Cylinder, Side Ag	52, 67, 71, 73
92160	Tie Rod, DE or Main Cyl	52
92161	Rod, Tie	52, 67, 71
92162	Air Regulator	59
92163	1/8" Pipe Plug	59
92164	Directional Valve, 220V	51, 61, 67
92165	Valve, Sequence	51, 67
92167	Seal Kit for 92156	58, 59
92168	Valve, Directional	51, 67
92169	Cylinder, Main Ind	52, 67, 71
92171	Directional Valve,110V	61
92172	Cylinder, Main Welded	52, 67
92173	Cylinder, Side Welded	67
92173	DE Cylinder, HB	52
92174	Cylinder, Double End	67
92174	Side Cylinder, HB	52
92201	Gland for DE Cyl.	52
92202	Pin, Side Cylinder	69, 71, 73
92202	Side Cylinder Pin	52
92203	Pin, Main Cylinder	69, 71, 73
92203	Top Cylinder Pin	52
92204	Gland, Cylinder, 1" Shaft	52
92205	Seal Kit for 92355	67, 71
92205	Seal Kit for 92355	52, 67, 71
92207	Seal Kit for 92159	67, 71, 73
92207	Seal Kit for 92159	52, 67, 71, 73
92208	Seal Kit for 92158	52, 67, 71, 73
92209	Seal Kit for 92256	52, 67, 71, 73
92231	O-Ring Seal Kit for DE Cylinder - 1.5" shaft	52
92235	Seal Kit	67, 71
92235	O-Ring Seal Kit for Main Cylinder	52
92236	Seal Kit for 92150	52, 67, 71
92246	Hose, 1/2" Suction 29"	63, 65
92247	Hose, 3/8" 36-1/2"	63

Part No.	Description	Page
92248	Hose, 3/8" 36-1/2" Long	63, 65
92256	Swager Cylinder 3-1/2"	52, 63, 67, 71, 73
92258	Hose Assembly	59
92261	Pump to Quick Disconnect Hose	58, 67, 71, 73
92263	Hose, 3/8" 19" Long	63, 65, 69, 71, 73
92264	Hose, 3/8" 23-1/2" Long	63, 67, 71, 73
92265	1/4" 2-Wire, 5,000 PSI 3/8" Female Swivel Hose 16" Long	61
92270	1/4" 2-Wire, 5,000 PSI 3/8" Female Swivel Hose 24"	61
92271	1/4" 2-Wire, 5,000 PSI 3/8" Female Swivel Hose 30" Long	61
92272	Hose, #8, 18" Lg.	67, 71, 73
92273	Hose, 3/8" Double Braid 5000 psi. 41" Long	65, 67, 71, 73
92274	Hose, #6, 50" Lg.	67
92275	Hose, #6, 58" Lg.	67, 71, 73
92276	Hose, #6, 62" Lg.	71, 73
92277	Hose, Return, #6, 24" Lg.	67, 71, 73
92278	Hose, Return #6, 15" Lg.	71, 73
92279	Hose, Return, #6, 56" Lg.	67, 71, 73
92280	Hose, Return, #6, 13" Lg.	67, 71, 73
92289	Filter Assembly	51, 67, 71, 73
92290	Filter	51, 67, 71, 73
92292	Gauge, Filter	51, 67, 71, 73
92296	Hydraulic Hose Assembly	58
92298	1/4" 2-Wire, 5,000 PSI 3/8" Female Swivel- 3/8" Female 90° Swivel Hose,	61
92312	Tube, 6-6	69, 71, 73
92313	Tube Assembly, 3/8"	63, 69, 71 ,73
92314	Fitting, 3-Way	69, 71, 73
92340	Rubber Spyder-Newman Motor	50
92341	Coupler with Spyder	50
92355	Cylinder, Double End, Ind. 3"	52, 67, 71
92356	Coupler, with Spyder	50, 63, 65, 67
92357	Coupler	50, 67, 71, 73
92358	Spyder	50, 63, 65, 67, 71, 73,
92360	Coupling, Throne 1/2" x 1-1/8"	50
92361	Coupler with Spyder	50
92362	Coupling, Tektro	50
92363	RubberSpyder	50
92364	Quick Disconnect	58, 59
92365	Filter Element	58
92367	Air Directional Valve	57
92369	Air Silencer	57
92370	Air Muffler	57
92371	Fitting Kit	57
92372	Exhaust Valve	57
92374	Check Valve	57
92375	3-1/2" x 3" Exp. Cylinder	61, 65
92381	Air Switch	57
92382	Main Cylinder, 6"	52
92389	Cylinder 5"	65
95007	Motor, Baldor, 3-HP, Single-phase	50
95010	Motor 7.5 HP	50
95012	Motor, Baldor, 7-1/2-HP,	50
95015	Motor, Baldor, 5-HP, Single-phase	50
95016	Motor, Baldor, 5-HP, 3-Phase	50
95019	Motor, 5 H.P., 60 Hz, Single-phase	65
95019	Motor, 5 H.P., 60 Hz, Single Phase	63, 65
95019	Motor, 5 HP	50
95020	Motor, 5 H.P., 60 Hz, Three-Phase	63, 65
95020	Motor, 5 HP 3-phase	50
95021	Mount, Motor-Pump	63, 65
95024	Electrical Enclosure	48
95025	Contactor, Single-phase	48
95026	Contactor, 3-Phase	48
95030	Starter	47
95034	Three-phase Heater	47
95035	Starter Enclosure	47
95036	3-Phase Starter	46
95038	Single-Phase Starter	46
95081	Three-Way Selector Switch	49
95082	Green Push Button	46
95083	Black Push Button	46
95085	Red, Stop-Extended Push Button	46
95087	Toggle Switch	61
95087	Toggle Switch	46, 48, 61
95087	Toggle Switch	48
95091	Toggle Switch Cover	61
95093	Limit Switch Roller	
95094	Limit Switch Lever Rod	46
95096	Reset Button	46
95097	Heater Element-509W-58	46
95102	Foot Pedal Guard	61
95102	Foot Pedal Guard	49
95107	HB-10, 1600 Enclosure	45
95108	Cover	45
95111	Conversion Kit for 2010	47
95112	Encoder Wheel	47
95113	Light Sensor Bracket	47
95114	Light Sensor Assembly	47
95116	Light Sensor Assembly	47
95117	3-phase Heater	47
95118	Single-Phase Heater	47
95135	Relay	46
95148	HB-10, 1600 Control, Complete	45
95149	HB-10, 1600 Control	45
95172	Kellum	61
95177	Trigger Switch	58
95187	Plug - 220V, 20A	61
95188	Receptacle - 220V, 20A	61
95189	Plug - 110V, 30A	61
95190	Receptacle - 110V, 30A	61
95191	Male Plug Power Cord	58
95192	Cord 10' Max. (sold per ft.)	58
95197	Electrical Power Cord Grip	58
95201	Single-Phase Plug,250V	47
95202	3-Phase Receptacle, 250V	47
95203	3-Phase Plug, 250V	47
95204	3-Phase Receptacle, 480V	47
95205	3-Phase Plug, 480V	47
95206	Single-Phase Plug, 250V	47
95207	Single-Phase Receptacle 250V	47
95208	3-Phase Plug, 250V	47
95209	3-Phase Receptacle, 250V	47
95216	Single-Phase Plug, 250V	47
95217	Single-phase Receptacle 250V	47
95218	3-phase Receptacle	47
95219	3-phase Plug	47
95229	1/2" Straight Conduit Connector	61
95230	1/2" x 8" Conduit	61
95370	10-3 Cord	61
95370	Single-Phase Cord	47
95371	3-phase Cord	47
95393	Receptacle	58
95394	Plug	58
95395	Cable Clamp	58
95396	Pins	58
95397	Sockets	58
95398	Wire	58
95402	Transformer, 24V	46
95403	Transformer, 12V	46
95407	2200 UF Filter Capacitor	46
95408	Bridge Rectifier	46
95410	Relay Socket	46
95413	Diode	46
95417	Shaft Encoder	46
95418	Foot Pedal Switch-2100, 24V	49
95419	Foot Pedal	61
95419	Pedal Switch	49
95420	Limit Switch	46,48
95422	Slow Blow Fuse	47
95426	Relay	58
95428	Encoder Connector	46
95429	Lock Nut	61
95429	Locknut	45
95435	Relay 230 Volts	46
95435	Eleven Pin Relay	48
95436	Roller Limit Switch	46
95437	Rod Limit Switch	46
95438	Green Push Button	46
95439	Red Push Button	46
95440	Black Push Button	
95441	Contact Block Open	46
95442	Contact Block Closed	46
95444	Foot Pedal Option Kit	49
95445	Fuse	46
95449	Cord Grip	61
95449	Cord Grip	45, 61
95452	Green Push Button	46
95453	Red Push Button	46
95454	Black Push Button	46
95455	Three-phase Heater 550V	46
95457	Cord Grip	45
95458	Foot Pedal Kit, Model 1600	49
95460	Eight Pin Relay	48
95461	Eight Pin Timer Relay	48
95462	Eight Pin Relay Socket	48
95463	Eleven Pin Relay Socket	48
95501	D50 Prorammable Controller	48
95502	Contactor, Single-Phase	45
95502	Single-phase Starter	46
95502	Single-phase Contactor	47
95502	Single-phase Starter	48
95503	Overload, Single-Phase	45, 46
95503	Single-phase Heater	46, 47, 48
95504	24 Volt Relay	48
95505	Relay Socker	48
95506	Proximity Sensor	48
95508	16-3 Cord, 30"	61
95509	Auxiliary Start Stop Switch	46
95510	DIN Rail	45
95511	Red Push Button	45, 48
95512	Green Push Button	45, 48
95513	Black Push Button	48
95514	Closed Contact	45, 48
95515	Open Contact	45, 47, 48
95518	Overload, 3-Phase	45, 46, 48
95519	Contactor, 3-Phase	45, 46, 48
95522	Limit Switch	46
95524	Limit Switch Roller	46
95529	3-Phase Starter	46
95530	Single-Phase Starter	46
95532	Surge Suppressor	46
95533	Auxiliary Contact	46
97000	Cam	54
97001	Housing	58
97010	Benchtop Frame Model 1690	61
97011	Cart Frame Model 1691	61
97050	Pusher Block Spring	39
97051	Stud, Threaded 1-14	41, 63, 69, 71, 73
97059	Wheel	61
97060	Phenolic Wheel	55
97061	Caster, Swivel, with Brake	55
97062	Caster, Rigid	55
97064	Caster Assembly Rigid	58
97065	Caster Assembly Swivel	58
97072	Swivel Caster	63, 65
97073	Rigid Caster	63, 65
97091	Steel Ruler-10'	40
97092	Marking Pen	40
97100	Nut, Knurled	41, 63, 69, 71, 73
97176	Clamp, Swager Arm	27, 53, 63
97177	Pistol Grip Handle	58
97206	Screw, Socket Head Cap,	

Part No.	Description	Page
	3/8"-16x3-1/4"	63, 69, 71, 73
97208	1/2" - 13 Jam Nut	27, 52, 53, 61, 63, 65, 69, 71, 73
97210	1/4" - 20 Locknut	14, 61, 63
97211	Bolt 1/2" - 13 x 1-1/2"	54
97217	Screw, Socket Head Cap, 1/2"-13x1-1/2"	63
97221	Bolt, Hex 3/8"-16 x 1/2"	67, 71, 73
97222	Lock Nut 1/2-13	54
97225	Locknut, 3/8"-16	63, 65
97226	Cap Screw 1/4-20 x 7/8	54
97231	Hex Bolt, 3/8"-16x1-3/4"	63
97231	Bolt 3/8-16 x 1-3/4	27, 53
97232	Hex Bolt, 1/2"-13x4"	27, 53, 63
97233	Cap Screw for Bumper Dies	39
97240	Cap Screw, 10-32x3/8"	19, 65
97244	Screw, 12-24	49
97246	1/4" Nut	56
97256	Bolt, Hex 1/2" - 13 x 1	67
97260	Bolt 1/4-20 x 3/4	54, 61, 63
97264	1/4" Pipe Nipple	59
97267	Bolt, Hex Hd. 3/8"-16 x 1"	27, 53, 63, 65, 67, 71, 73
97268	10 - 24 x 11/4" Allen Head Cap Screw	61
97282	10-32 x 3/8 Allen Screw	45
97283	Screw, 6-32	49, 61
97285	6 - 32 Star Washer	61
97292	Jam Nut, 3/4"	65
97293	Lockwasher, 3/4"	65
97294	Hex Bolt, 5/16"-18x2-1/2"	65
97295	Jam Nut, 5/16"-18	65
97296	Lockwasher, 5/16"	65
97301	Operator's Manual (English)	42
97302	Training Video	15, 42
97322	Operator's Manual	47
97330	Nut	52
97333	1/2" Flat Washer	61
97334	1/2" x 2" Cotter Pin	61
97377	Screw, Sk. Hd. Cap 10-24	67
97378	Foot Control Bracket	55
97379	Connecting Rod	55, 73
97380	Pedal, Foot Control	55, 73
97381	Complete Kit	55
97383	1/2" Lock Washer	52, 61, 63, 65, 69, 71, 73
97393	Screw, Machine, 1/4" NC x 5/8"	56
97395	1/4" Flat Washer	56, 61
97400	Hex Bolt, 1/2"-13x3/4"	54, 63, 65
97406	Catch	57
97407	Chrome Handle	57
97422	Casting	56
97426	1/4" x 1/2" Stove Bolt	56
97427	Catch	56
97429	Spring, Catch	56
97430	Washer, Rubber	56
97431	Block	56
97432	Arbor	56
97433	Pin	56
97434	Guard, Vinyl	56
97447	Knee Pedal Mount	49
97448	Knee Pedal Pad	49
97464	Hinge pin	57
97465	Locking Pin pin	57
97466	Top Assembly	56
97467	Base Assembly	56
97468	Spigot	57
97469	Knee Pedal Mount, HB-10 - 1600	49
97472	End Cap	63, 65
98000	Decal Kit	42
98024	Calibration Decal	58, 59
98025	Sizing Decal	58
98036	Direction Label	61, 49
98042	Sizing Chart	19, 42, 61
98043	Calibration Decal	19, 42, 61, 63, 65
98071	Label, Pinch Point	56
98072	Decal, Exhaust Work Only	56
98073	Decal, Maximum 70 lbs.	56
98078	Decal, Quick•Crush	57
99002	Tune-Up Kit	39
99006	Accessory Package	40
1720DF	2" Clamp Collets	26
92009DT	90 Ftg, 1/2ML NPT x 3/8ML JIC, DT	61, 63, 65, 69, 71, 73
92103P	Swage Valve with Handle - Plugged	63
92103P	Valve for Swager w/o fittings for 1673	52
95115RB	Reconditioned Board	47
95390RB	Reconditioned Control Board	46
F2372	7/16" Round Rod Material	15, 56
F2373	1/2" Round Rod Material	15, 56
F2374	1-1/4" x 1/8" Flat Rod Material	15, 56

The People of Huth

Joe Becker,
Plant Manager

Mary Rusch,
Office Manager

Deb Daley,
Accounting

Mark Purman,
R&D/Customer Service

Gregg Ulik, Team Leader
Shipping/Receiving/
Purchasing

The People of Huth

Joe Takacs, Team Leader, Assembly/ Customer Service

Bob Lechner, Team Leader, Machine Shop

Jerry Geldnich, Assembly/Hydraulics

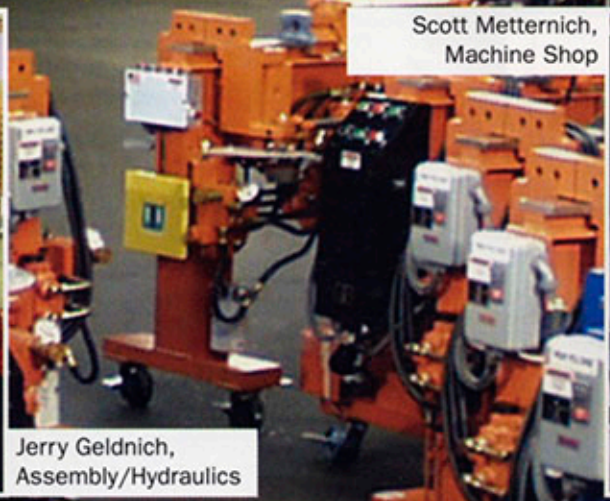

Scott Metternich, Machine Shop

Mark Jeffords, Welding

Keith Lucht, Machine Shop

Tony Kreuser, Painter

Tom McKinley, Machine Shop

HUTH PROGRAM CARDS

Complete bending data for more than 7,500 part numbers

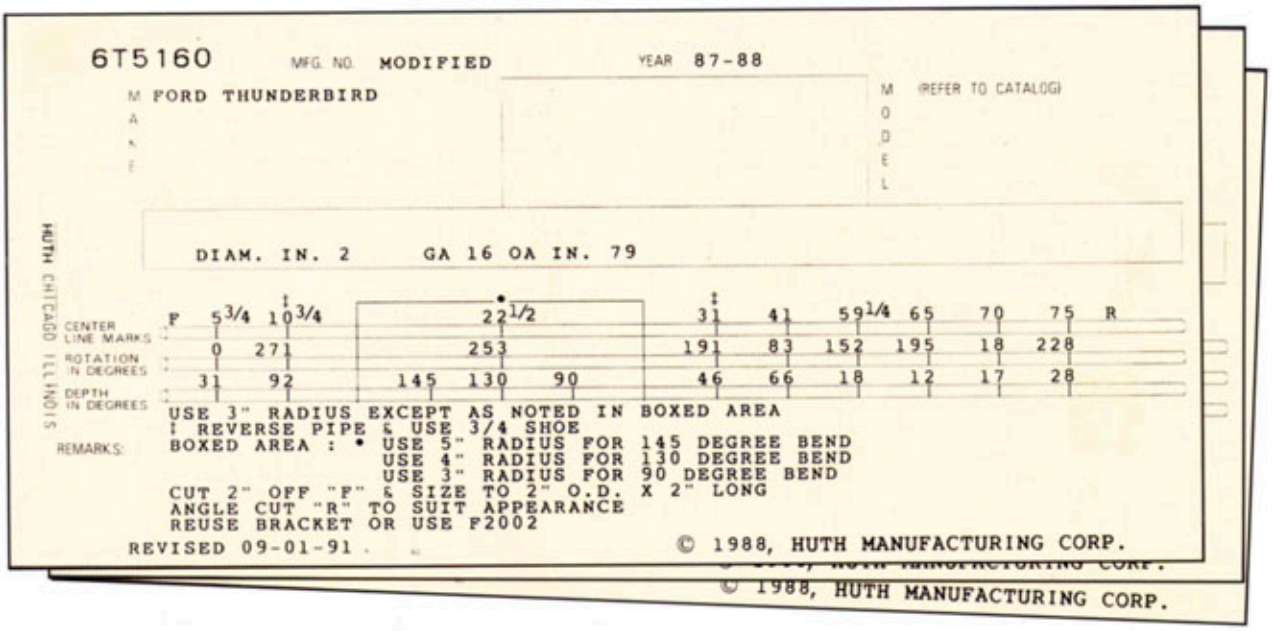

With a Huth Bender, a stick of tubing and these cards even a beginning installer can quickly bend an OE-fit pipe.

More than 7,500 strong...Huth's program cards enable even the beginning installer to start with a stick of tubing and end up with an oe-fit pipe.

Since their inception, Huth's program cards, Part Number 950 (Cards) and 980 (electronic format for IBM computers), have not only been the most timely but have also been the most accurate in the industry. Here's why:

- First, Huth R&D technicians take specifications directly from the pipes on the vehicles the cards are intended for.
- Then they form the replacement pipes on Huth Benders.
- Finally, they test the replacement pipes on the vehicles themselves - before the cards are approved for use. That's why these copyrighted cards define precision bending.

AVAILABLE ON DISK!

(for IBM-compatible computers)

See page 20 for ordering details or call today for more information.

HUTH®

800-558-7808

www.huthbenders.com

HUTH®

800-558-7808

www.huthbenders.com

M5275 April 2004 supercedes M5275 2001